MONTAGETAFEL · ASSEMBLY DRAWING

MegaRail xn

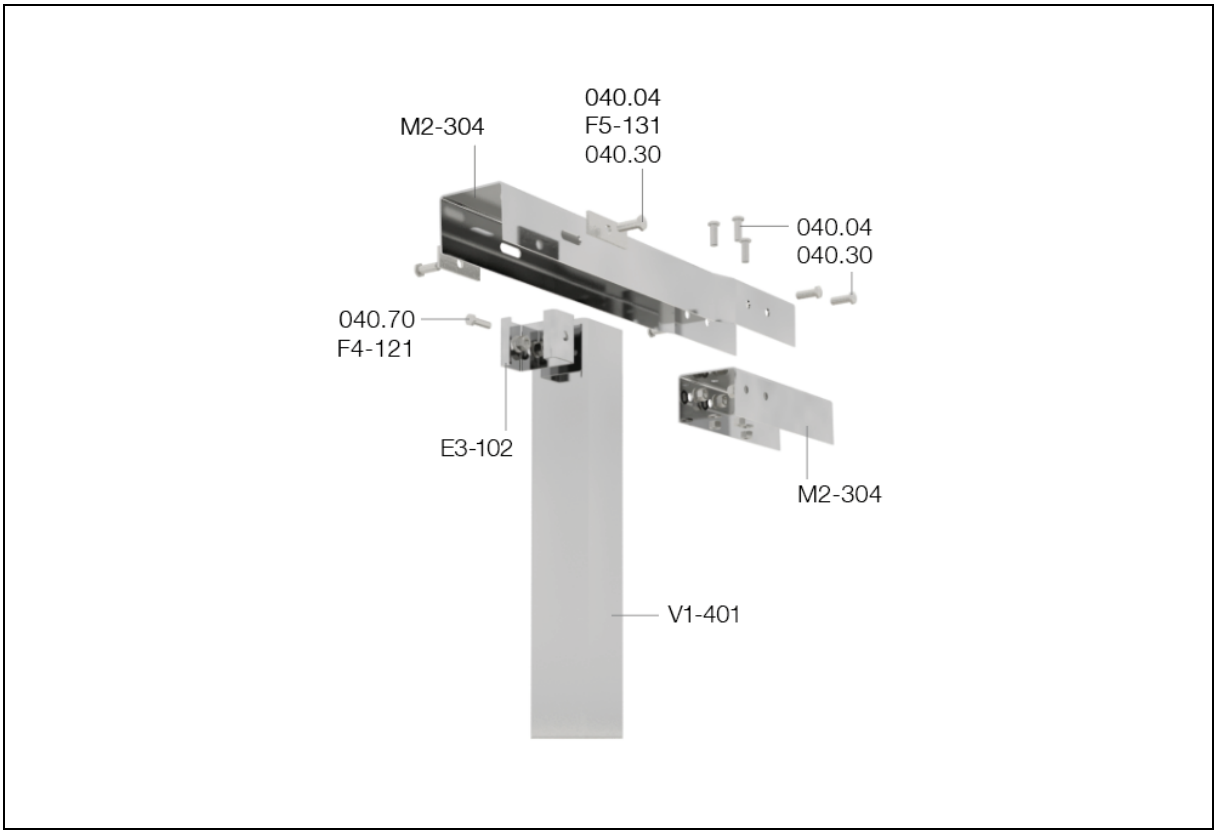

Bauteile · Main components

Nr. · no.	Beschreibung	Description	Qty/4.5 m
E3-102	Versteifungselement, C125x62.5, 85 mm, 5.0	Stiffener, C125x62.5, 85 mm, 5.0	1,50
M2-304	KP, U140x100, 4740 mm, 4.0, we	BP, U140x100, 4740 mm, 4.0, we	1,00
V1-401	Pfosten, C125x125, 1600 mm, 5.0	Post, C125x125, 1600 mm, 5.0	0,75

Befestigungsmaterial · Fasteners

Nr. · no.	Beschreibung	Description	Qty/m
F5-131	Decklasche, f. M16, 115x40x6.0, RL	Plate, f. M16, 115x40x6.0, RL	3,00
040.04	HRK-Schraube m. 6-kt., M16x45, 8.8	Panhead bolt w. hex., M16x45, 8.8	10,00
040.30	Scheibe, f. M16, Ø18x30x3.0	Washer, f. M16, Ø18x30x3.0	10,00
040.70	HRK-Schraube m. 6-kt., M12x35, 8.8	Panhead bolt w. hex., M12x35, 8.8	1,75
F4-121	Scheibe, f. M12, Ø13.5x24x2.5	Washer, f. M12, Ø13.5x24x2.5	1,75

© 05/2022 Saferoad RRS GmbH · Changes and errors excepted