MONTAGETAFEL · ASSEMBLY DRAWING

SafeStar 431

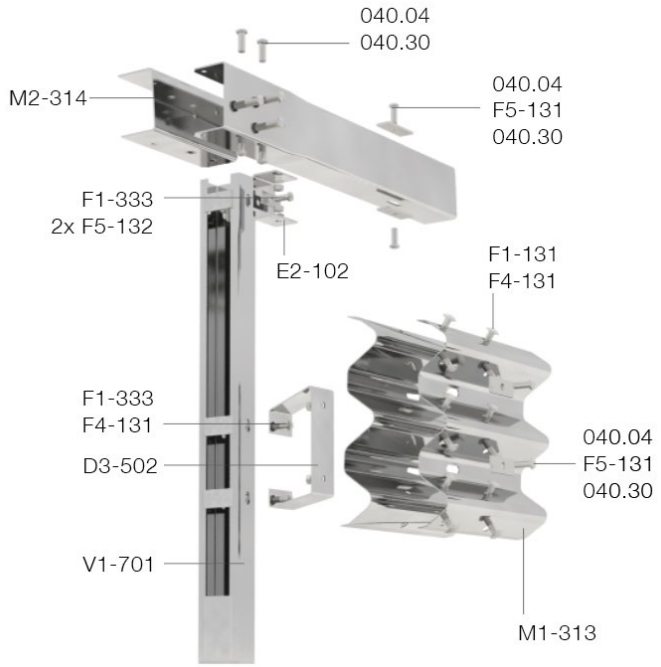

Bauteile · **Main components**

Nr. · no.	Beschreibung	Description	Qty/m
D3-502	Defo. Element, 160 mm, 3.0	Defo. Element, 160 mm, 3.0	1,00
E2-102	KP-Halter	BP bracket	1,00
M1-313	SP-Holm, 3W, 4320 mm, 2.5	Beam, 3W, 4320 mm, 2.5	0,25
M2-314	KP, U140x100, 4240 mm, 4.0, we	BP, U140x100, 4240 mm, 4.0, we	0,25
V1-701	Pfosten, C140x80, 2100 mm, 5.0	Post, C140x80, 2100 mm, 5.0	1,00

Befestigungsmaterial · **Fasteners**

Nr. · no.	Beschreibung	Description	Qty/m
F5-131	Decklasche, f. M16, 115x40x6.0, RL	Plate, f. M16, 115x40x6.0, RL	4,00
F5-132	Decklasche, f. M16, 85x35x4.0, RL	Plate, f. M16, 85x35x4.0, RL	2,00
040.04	HRK-Schraube m. 6-kt., M16x45, 8.8	Panhead bolt w. hex., M16x45, 8.8	5,75
F1-131	HRK-Schraube, M16x30, 8.8	Panhead bolt, M16x30, 8.8	3,00
F1-333	6-kt.-Schraube, M16x45, 10.9	Hexagonal bolt, M16x45, 10.9	3,00
040.30	Scheibe, f. M16, Ø18x30x3.0	Washer, f. M16, Ø18x30x3.0	5,75
F4-131	Scheibe, f. M16, Ø18x38x3.0	Washer, f. M16, Ø18x38x3.0	5,00

© 11/2021 Saferoad RRS GmbH · Changes and errors excepted