SAFEROAD®

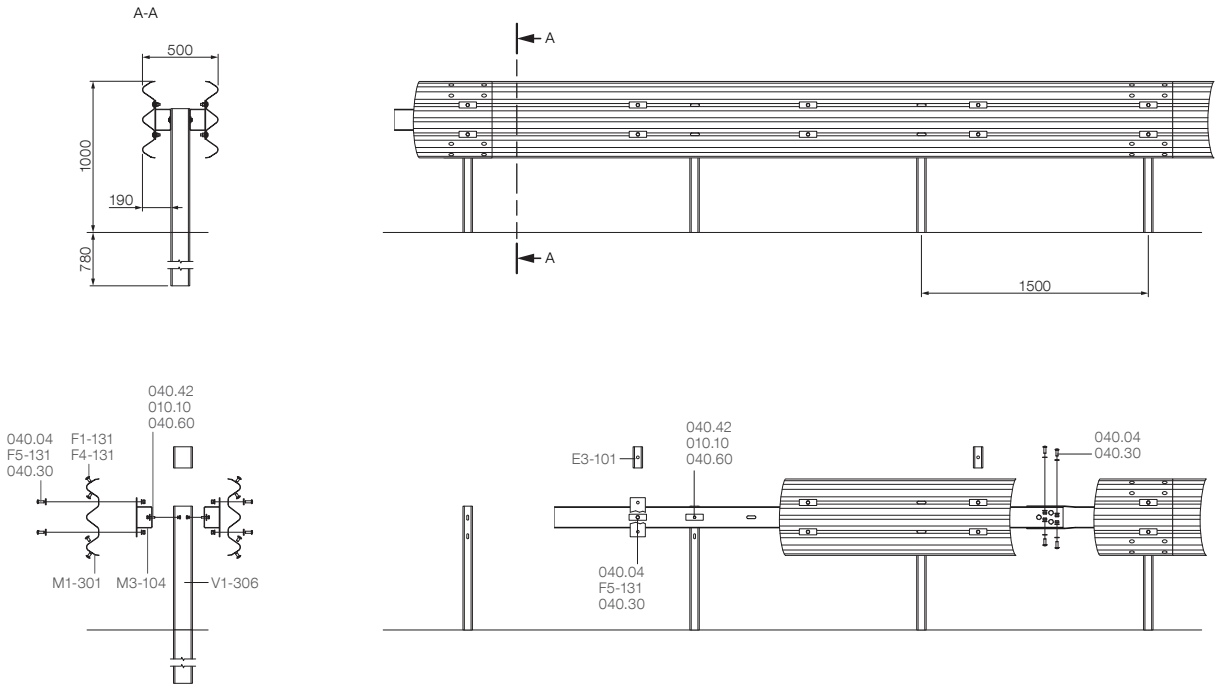

Parts

Art. no.	Description	Qty / 4.5 m
E3-101	BP stiffener, 140 mm	2
M1-301	Beam, 3W, 4.820 mm, 2.4	2
M3-104	Reinf. BP, 4.740 mm, 4.0	2
V1-306	Post, C125, 1.600 mm, 5.0	3
010.10	Plate M10	6
F5-131	Plate M16	20
040.04	Panhead bolt M16x45, 8.8	34
F1-131	Panhead bolt M16x30, 8.8	16
040.30	Washer, Ø18x30	34
F4-131	Washer, Ø18x38	16
040.42	Hexagonal bolt, M10x45, 4.6	6
040.60	Washer, Ø11x20	6

Fasteners

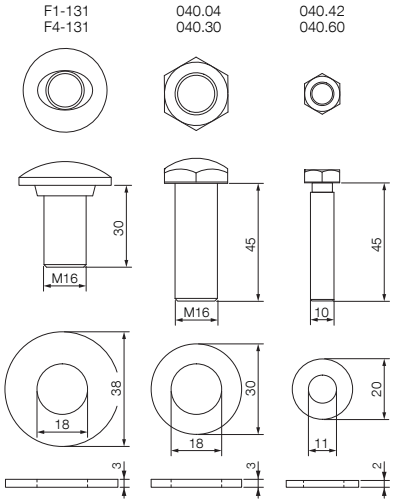

Attention! Change of the part numbers: 001.54 = M1-301 / 007.30 = E3-101 / 063.29 = V1-306 / 010.40 = F5-131 / 040.08 = F1-131 / 040.38 = F4-131

Systemübersicht · System overview · Présentation du système · Panoramica del sistema · Descripción general del sistema · Visão geral do sistema · Přehled systému Sisteme Genel Bakış · Przegląd systemu · Обзор системы · Prezentare generală sistem · Overzicht van het systeem · Systemtegning · Systemritning · نظرة عامة للنظام

SafeStar 351d

H3 · W5 · A

© 03/2021 Saferoad RRS GmbH