SAFEROAD®

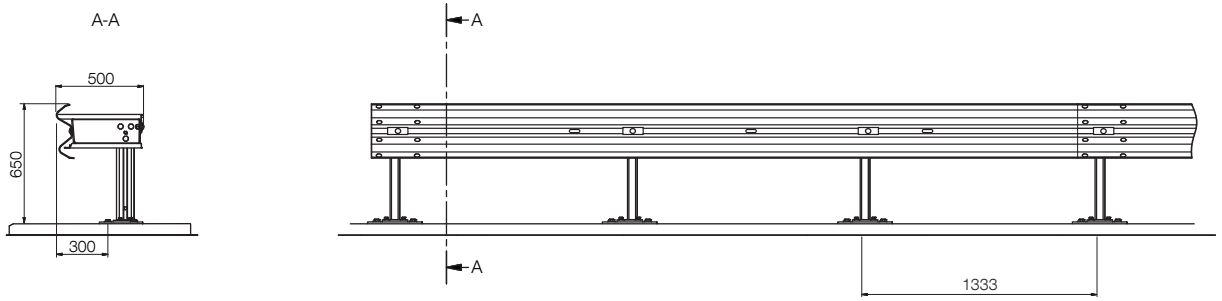

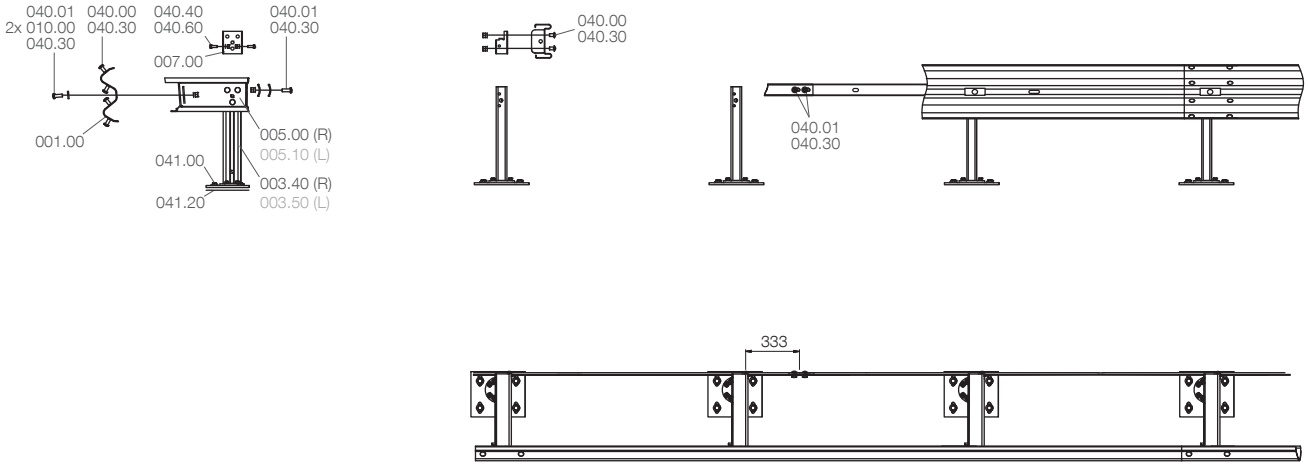

Parts

Art. no.	Description	Number/m
001.00	Beam A, 4.300 mm, 3.0	0.25
003.40	Post w. plate, 515 mm, R	0.75
003.50	Post w. plate, 515 mm, L	0.75
005.00	Spacer, 480 mm, right	0.75
005.10	Spacer, 480 mm, left	0.75
007.00	Claw	0.75
008.00	Tension belt, 4.140 mm	0.25
010.00	Plate M16, TL	1.50
040.00	Panhead bolt M16x27, 4.6	4.25
040.01	Panhead bolt M16x45, 4.6	2.00
040.30	Washer Ø18x30	6.25
040.40	Hexagonal bolt M10x25, 4.6	1.50
040.60	Washer Ø11x20	1.50
041.00	Anchor M16x165, 5.8	3.00
041.20	Gasket plate, 250x300	0.75

Fasteners

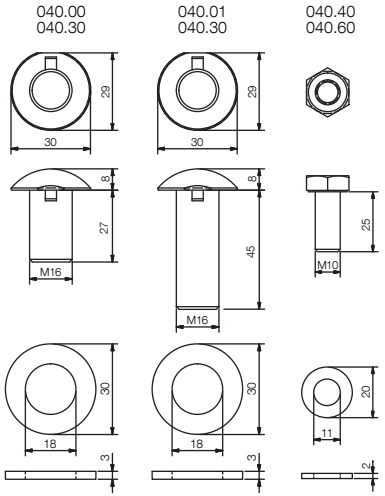

Systemübersicht · System overview · Présentation du système · Panoramica del sistema · Descripción general del sistema · Visão geral do sistema · Přehled systému Sisteme Genel Bakış · Przegląd systemu · Обзор системы · Prezentare generală sistem · Overzicht van het systeem · Systemtegning · Systemritning · نظرة عامة للنظام

EDSP 1.33 Bw

H1 · W5 · A

© 11/2018 Saferoad RRS GmbH, Please note that forwarding this drawing without permission from Saferoad RSS GmbH is a break of copyright.

SAFEROAD®

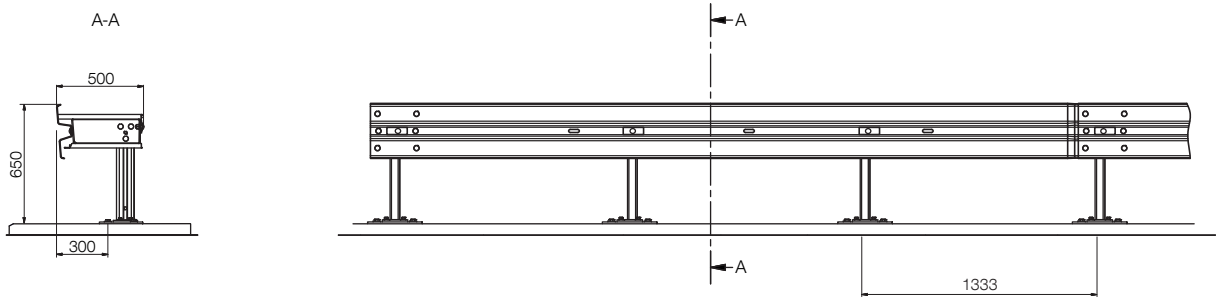

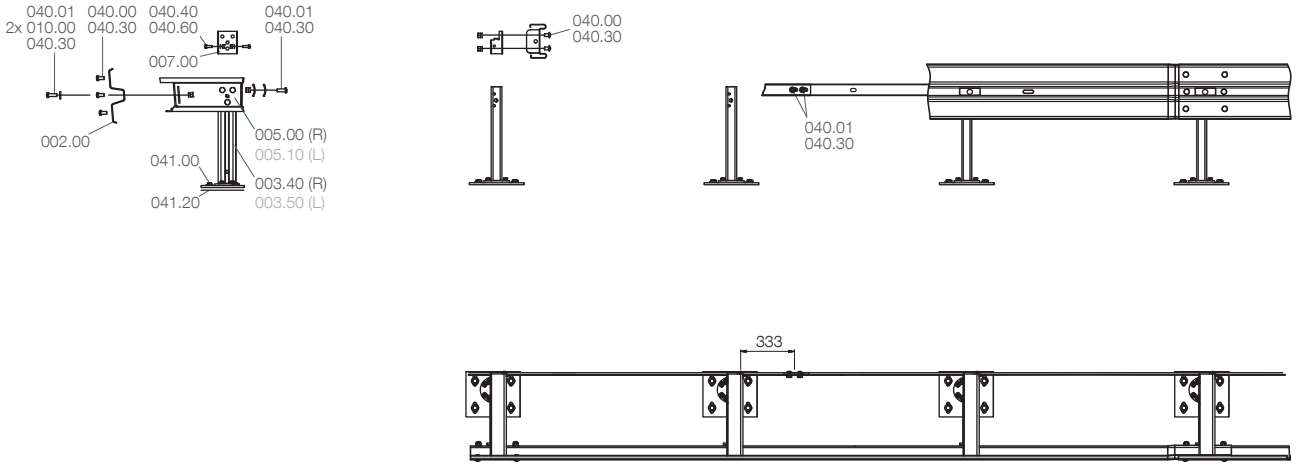

Parts

Art. no.	Description	Number/m
002.00	Beam B, 4.300 mm, 3.0	0.25
003.40	Post w. plate, 515 mm, R	0.75
003.50	Post w. plate, 515 mm, L	0.75
005.00	Spacer, 480 mm, right	0.75
005.10	Spacer, 480 mm, left	0.75
007.00	Claw	0.75
008.00	Tension belt, 4.140 mm	0.25
010.00	Plate M16, TL	1.50
040.00	Panhead bolt M16x27, 4.6	3.75
040.01	Panhead bolt M16x45, 4.6	2.00
040.30	Washer Ø18x30	5.75
040.40	Hexagonal bolt M10x25, 4.6	1.50
040.60	Washer Ø11x20	1.50
041.00	Anchor M16x165, 5.8	3.00
041.20	Gasket plate, 250x300	0.75

Fasteners

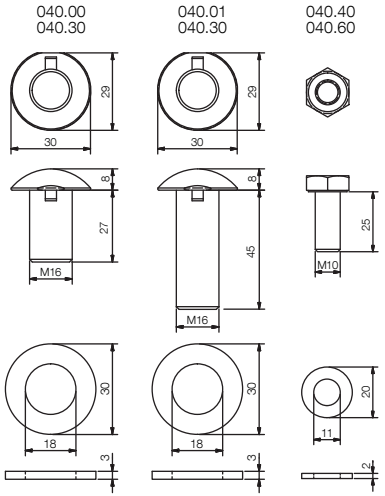

Systemübersicht · System overview · Présentation du système · Panoramica del sistema · Descripción general del sistema · Visão geral do sistema · Přehled systému Sisteme Genel Bakış · Przegląd systemu · Обзор системы · Prezentare generală sistem · Overzicht van het systeem · Systemtegning · Systemritning · ماظن ةماع ةرظن

EDSP 1.33 Bw

H1 · W5 · A

© 09/2015 Saferoad RRS GmbH, Please note that forwarding this drawing without permission from Saferoad RSS GmbH is a break of copyright.