MONTAGETAFEL · ASSEMBLY DRAWING - PROFILE A

MegaRail ex

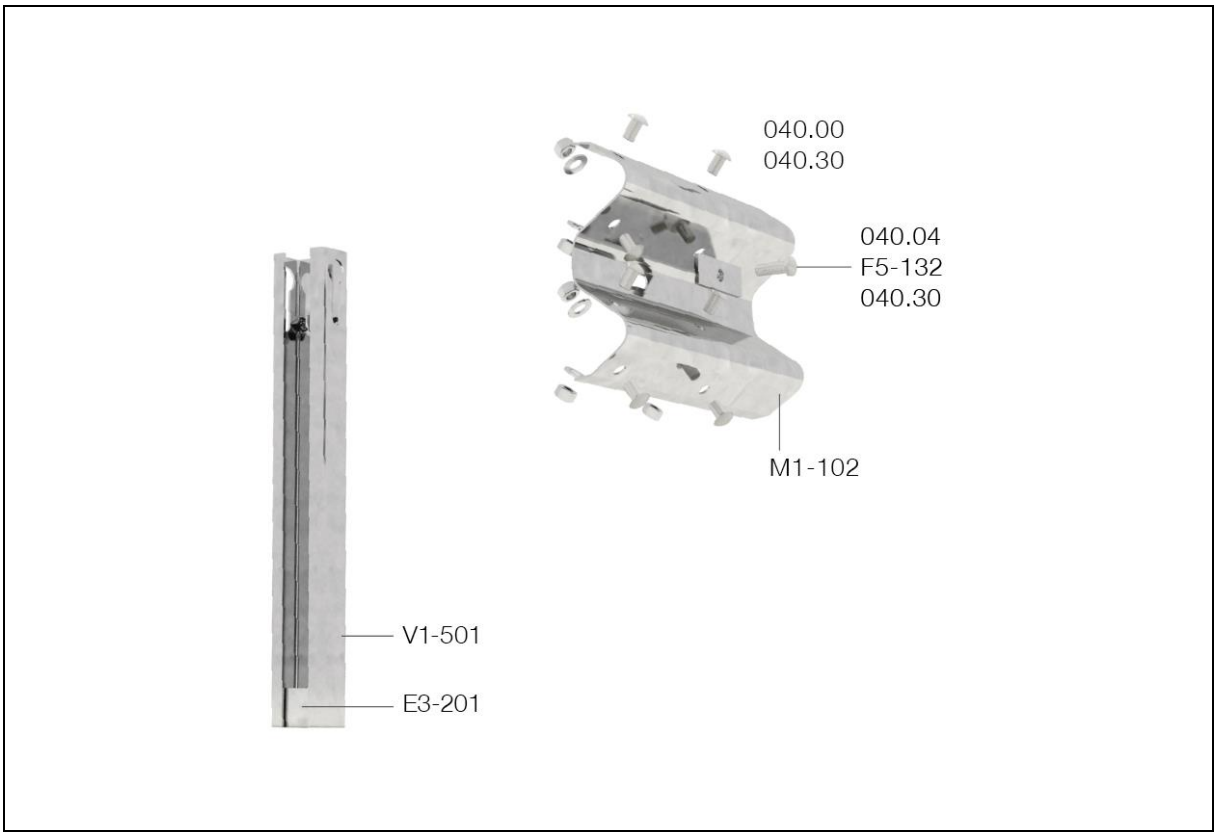

Bauteile · **Main components**

Nr. · no.	Beschreibung	Description	Qty/m
E3-201	Versteifungselement, U85x45, 230 mm, 4.0	Stiffener, U85x45, 230 mm, 4.0	0,33
M1-102	SP-Holm, A, 4300 mm, 2.5	Beam, A, 4300 mm, 2.5	0,25
V1-501	Pfosten, C100x60, 1500 mm, 4.0	Post, C100x60, 1500 mm, 4.0	0,33

Befestigungsmaterial · **Fasteners**

Nr. · no.	Beschreibung	Description	Qty/m
F5-132	Decklasche, f. M16, 85x35x4.0, RL	Plate, f. M16, 85x35x4.0, RL	0,33
040.00	HRK-Schraube, M16x27, 4.6	Panhead bolt, M16x27, 4.6	2,00
040.04	HRK-Schraube m. 6-kt., M16x45, 8.8	Panhead bolt w. hex., M16x45, 8.8	0,33
040.30	Scheibe, f. M16, Ø18x30x3.0	Washer, f. M16, Ø18x30x3.0	2,33

© 01/2022 Saferoad RRS GmbH · Changes and errors excepted

MONTAGETAFEL · ASSEMBLY DRAWING - PROFILE B

MegaRail ex

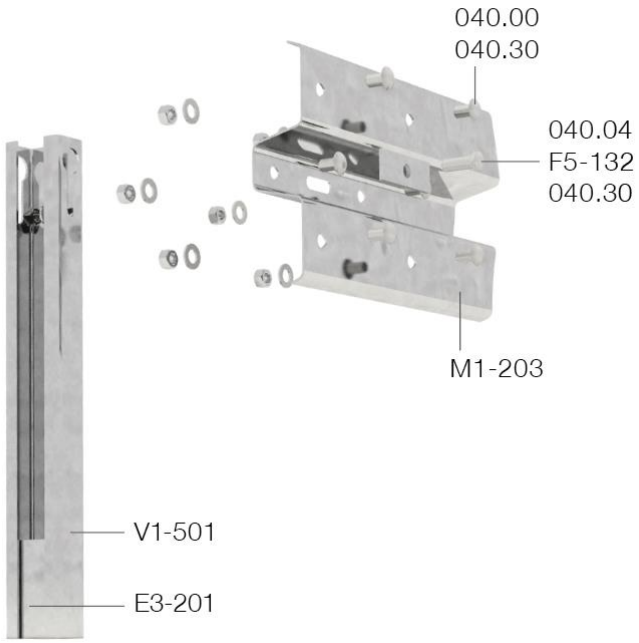

Die Abbildung beinhaltet die Modifikation M2 · The figure includes the modification M1

Bauteile · Main components

Nr. · no.	Beschreibung	Description	Qty/m
E3-201	Versteifungselement, U85x45, 230 mm, 4.0	Stiffener, U85x45, 230 mm, 4.0	0,33
M1-203	SP-Holm, B, 4300 mm, 3.0	Beam, B, 4300 mm, 3.0	0,25
V1-501	Pfosten, C100x60, 1500 mm, 4.0	Post, C100x60, 1500 mm, 4.0	0,33

Befestigungsmaterial · Fasteners

Nr. · no.	Beschreibung	Description	Qty/m
F5-132	Decklasche, f. M16, 85x35x4.0, RL	Plate, f. M16, 85x35x4.0, RL	0,33
040.00	HRK-Schraube, M16x27, 4.6	Panhead bolt, M16x27, 4.6	1,50
040.04	HRK-Schraube m. 6-kt., M16x45, 8.8	Panhead bolt w. hex., M16x45, 8.8	0,33
040.30	Scheibe, f. M16, Ø18x30x3.0	Washer, f. M16, Ø18x30x3.0	1,83

© 01/2022 Saferoad RRS GmbH · Changes and errors excepted