MONTAGETAFEL · ASSEMBLY DRAWING

SafeStar 351

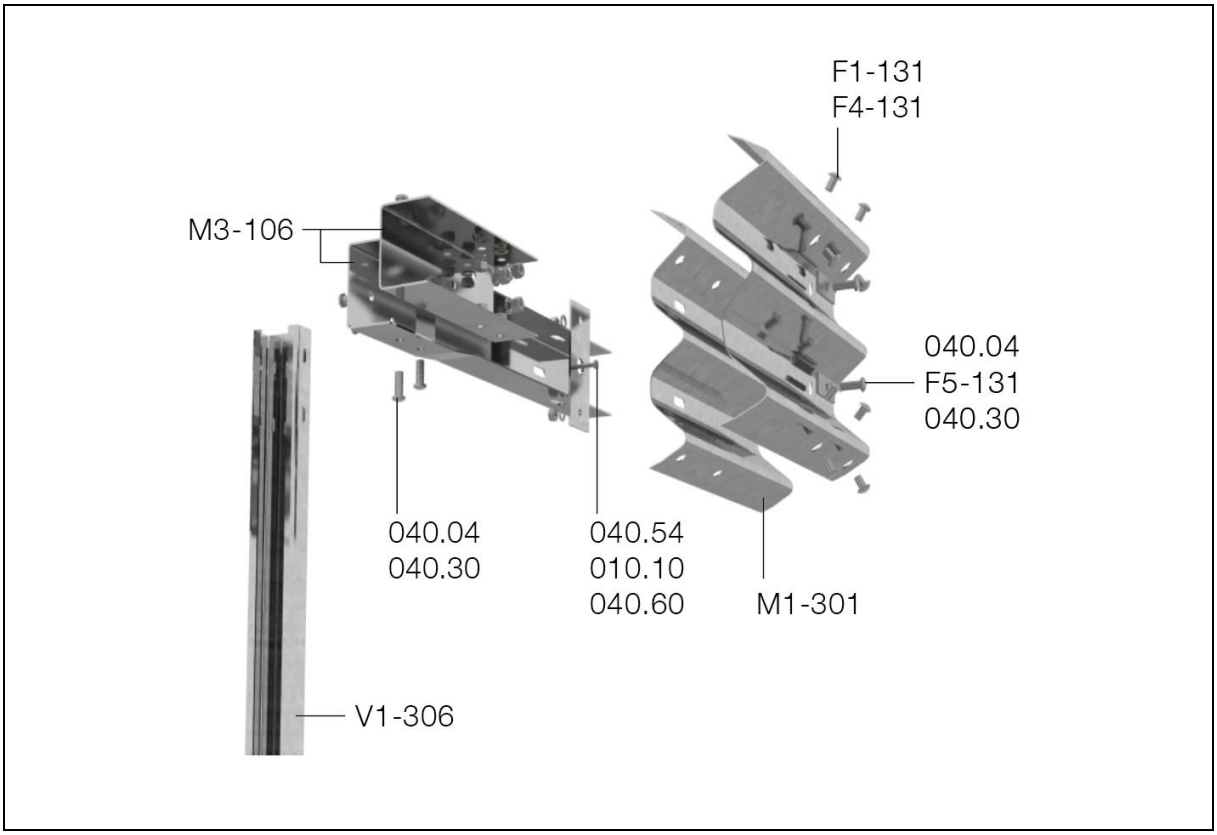

Bauteile · **Main components**

Nr. · no.	Beschreibung	Description	Qty/4.5 m
M1-301	SP-Holm, 3W, 4820 mm, 2.4	Beam, 3W, 4820 mm, 2.4	1,00
M3-106	Verstärk.-profil, U140x100, 4740 mm, 5.0, we	Reinf. element, U140x100, 4740 mm, 5.0, we	1,00
V1-306	Pfosten, C125x62.5, 1600 mm, 5.0	Post, C125x62.5, 1600 mm, 5.0	4,00

Befestigungsmaterial · **Fasteners**

Nr. · no.	Beschreibung	Description	Qty/m
010.10	Decklasche, f. M10, 115x40x5.0, RL	Plate, f. M10, 115x40x5.0, RL	4,00
F5-131	Decklasche, f. M16, 115x40x6.0, RL	Plate, f. M16, 115x40x6.0, RL	8,00
040.04	HRK-Schraube m. 6-kt., M16x45, 8.8	Panhead bolt w. hex., M16x45, 8.8	15,00
F1-131	HRK-Schraube, M16x30, 8.8	Panhead bolt, M16x30, 8.8	8,00
040.30	Scheibe, f. M16, Ø18x30x3.0	Washer, f. M16, Ø18x30x3.0	15,00
F4-131	Scheibe, f. M16, Ø18x38x3.0	Washer, f. M16, Ø18x38x3.0	8,00
040.54	6-kt.-Schraube, M10x45, 8.8	Hexagonal bolt, M10x45, 8.8	4,00
040.60	Scheibe, f. M10, Ø11x20x2.0	Washer, f. M10, Ø11x20x2.0	4,00

© 01/2022 Saferoad RRS GmbH · Changes and errors excepted