SAFEROAD®

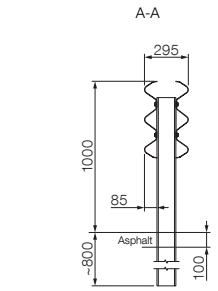

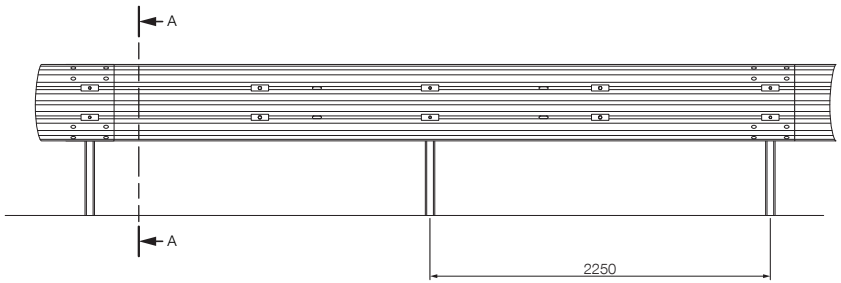

Parts

Art. no.	Description	Qty / 4.5 m
D4-302	Spacer, C125. 275 mm	2
M1-302	Beam, 3W, 4.820 mm, 2.5	2
V1-313	Post, C125, 1.700 mm, 5.0	2
010.10	Plate M10	8
F5-131	Plate M16	8
040.04	Panhead bolt M16x45, 8.8	8
F1-131	Panhead bolt M16x30, 8.8	16
040.30	Washer, Ø18x30	8
F4-131	Washer, Ø18x38	16
040.54	Hexagonal bolt, M10x45, 8.8	8
040.60	Washer, Ø11x20	8

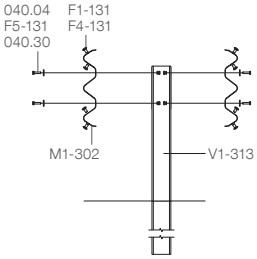

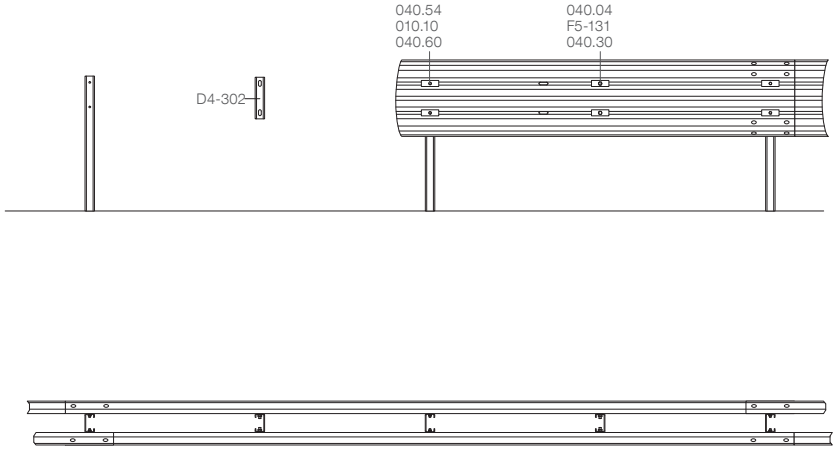

Fasteners

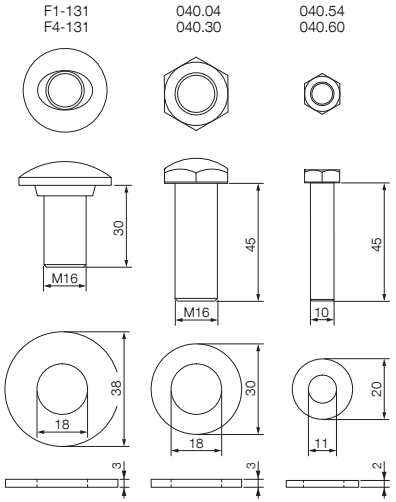

Attention! Change of the part numbers: 001.56 = M1-302 / 007.54 = D4-302 / 063.17 = V1-313 / 010.40 = F5-131 / 040.08 = F1-131 / 040.38 = F4-131

Systemübersicht · System overview · Présentation du système · Panoramica del sistema · Descripción general del sistema · Visão geral do sistema · Přehled systému Sisteme Genel Bakış · Przegląd systemu · Обзор системы · Prezentare generală sistem · Overzicht van het systeem · Systemtegning · Systemritning · نظرة عامة للنظام

SafeStar 241d

H2 · W4 · A

© 03/2021 Saferoad RRS GmbH