MONTAGETAFEL · ASSEMBLY DRAWING - PROFILE A

MegaRail bs

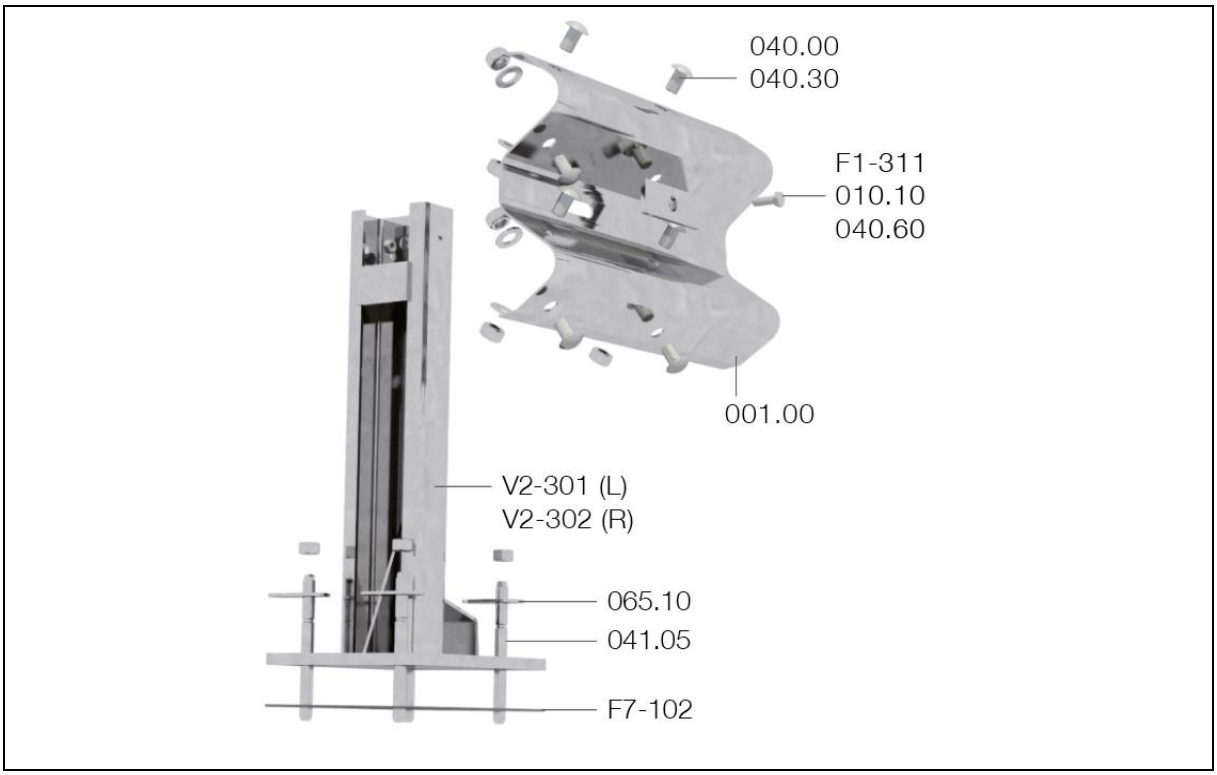

Bauteile · Main components

Nr. · no.	Beschreibung	Description	Qty/m	
			Left	Right
001.00	SP-Holm, A, 4300 mm, 3.0	Beam, A, 4300 mm, 3.0	2,00	
V2-302	Fpl.-Pfosten, C125x62.5, 595 mm, 4%, R	Post w. plate, C125x62.5, 595 mm, 4%, R		0,75
V2-301	Fpl.-Pfosten, C125x62.5, 595 mm, 4%, L	Post w. plate, C125x62.5, 595 mm, 4%, L	0,75	

Befestigungsmaterial · Fasteners

Nr. · no.	Beschreibung	Description	Qty/m
010.10	Decklasche, f. M10, 115x40x5.0, RL	Plate, f. M10, 115x40x5.0, RL	0,75
040.00	HRK-Schraube, M16x27, 4.6	Panhead bolt, M16x27, 4.6	2,00
040.30	Scheibe, f. M16, Ø18x30x3.0	Washer, f. M16, Ø18x30x3.0	2,00
F1-311	6-kt.-Schraube, M10x30, 4.6	Hexagonal bolt, M10x30, 4.6	0,75
040.60	Scheibe, f. M10, Ø11x20x2.0	Washer, f. M10, Ø11x20x2.0	0,75

Verankerung · Anchorage

Nr. · no.	Beschreibung	Description	Qty/m
041.05	Verbundankerset, M16x185, 8.8	Anchor set, M16x185, 8.8	3,00
065.10	Decklasche, f. M16, 90x30x5.0, RL	Plate, f. M16, 90x30x5.0, RL	3,00
F7-102	Dichtungsplatte, 250x250	Gasket plate, 250x250	0,75

© 07/2021 Saferoad RRS GmbH · Changes and errors excepted

MONTAGETAFEL · ASSEMBLY DRAWING - PROFILE B

MegaRail bs

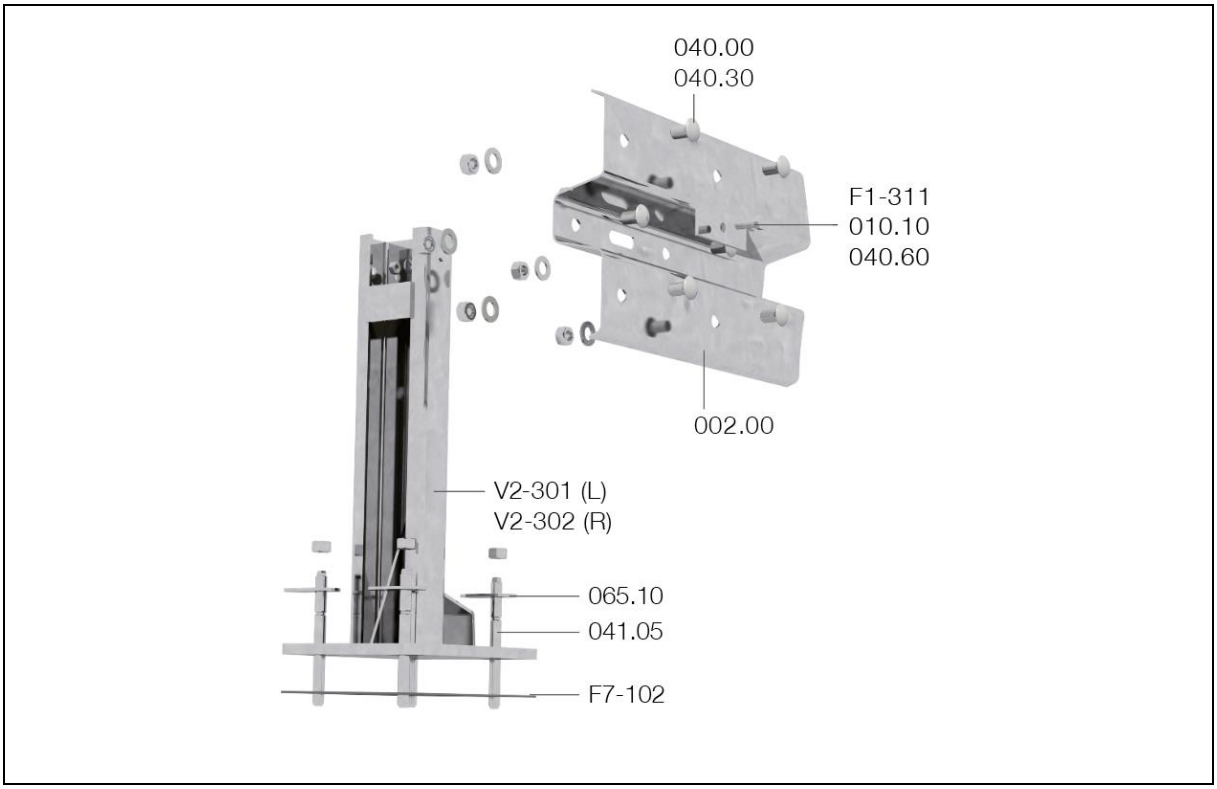

Bauteile · Main components

Nr. · no.	Beschreibung	Description	Qty/m	
			Left	Right
002.00	SP-Holm, B, 4300 mm, 3.0	Beam, B, 4300 mm, 3.0	2,00	
V2-302	Fpl.-Pfosten, C125x62.5, 595 mm, 4%, R	Post w. plate, C125x62.5, 595 mm, 4%, R		0,75
V2-301	Fpl.-Pfosten, C125x62.5, 595 mm, 4%, L	Post w. plate, C125x62.5, 595 mm, 4%, L	0,75	

Befestigungsmaterial · Fasteners

Nr. · no.	Beschreibung	Description	Qty/m
010.10	Decklasche, f. M10, 115x40x5.0, RL	Plate, f. M10, 115x40x5.0, RL	0,75
040.00	HRK-Schraube, M16x27, 4.6	Panhead bolt, M16x27, 4.6	1,50
040.30	Scheibe, f. M16, Ø18x30x3.0	Washer, f. M16, Ø18x30x3.0	1,50
F1-311	6-kt.-Schraube, M10x30, 4.6	Hexagonal bolt, M10x30, 4.6	0,75
040.60	Scheibe, f. M10, Ø11x20x2.0	Washer, f. M10, Ø11x20x2.0	0,75

Verankerung · Anchorage

Nr. · no.	Beschreibung	Description	Qty/m
041.05	Verbundankerset, M16x185, 8.8	Anchor set, M16x185, 8.8	3,00
065.10	Decklasche, f. M16, 90x30x5.0, RL	Plate, f. M16, 90x30x5.0, RL	3,00
F7-102	Dichtungsplatte, 250x250	Gasket plate, 250x250	0,75

© 07/2021 Saferoad RRS GmbH · Changes and errors excepted