MONTAGETAFEL · ASSEMBLY DRAWING

MegaRail dx

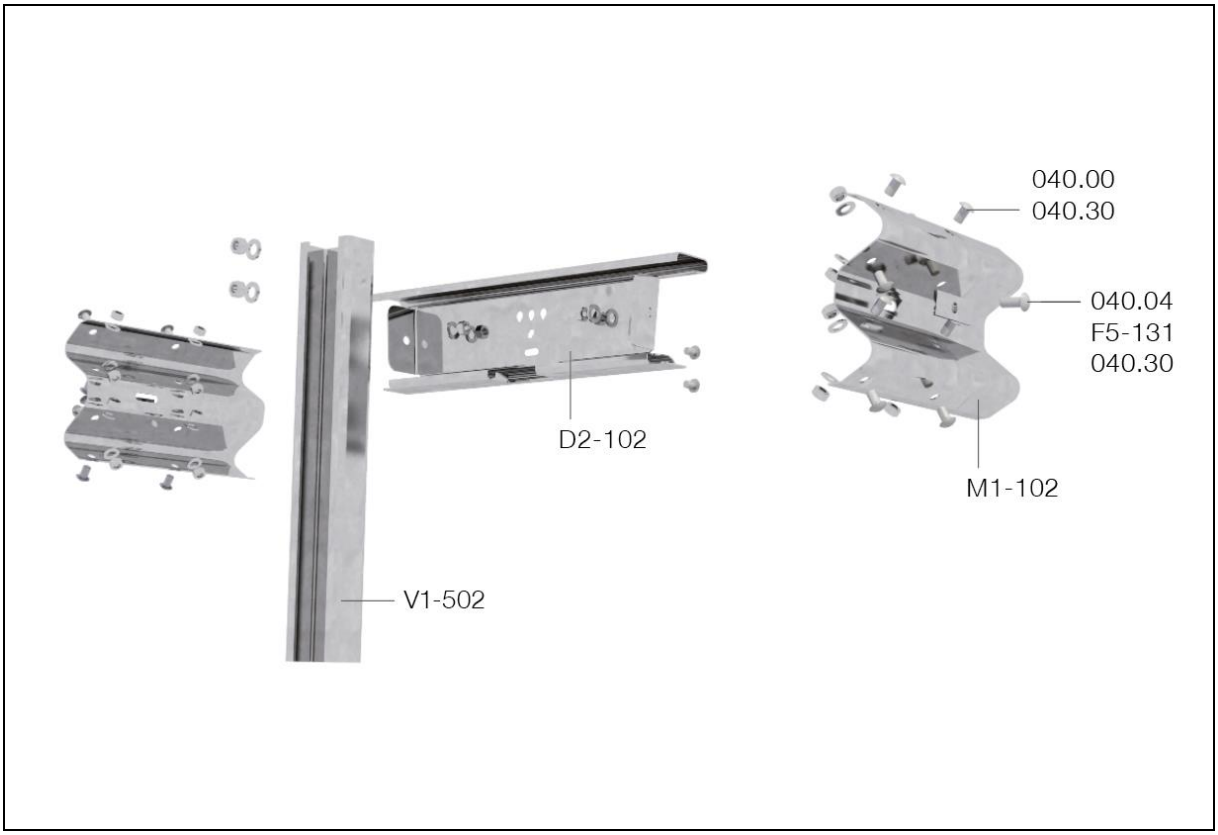

Bauteile · **Main components**

Nr. · no.	Beschreibung	Description	Qty/m
D2-102	Distanzstück, 780 mm, 3.0	Separator, 780 mm, 3.0	0,38
M1-102	SP-Holm, A, 4300 mm, 2.5	Beam, A, 4300 mm, 2.5	0,50
V1-502	Pfosten, C100x60, 1600 mm, 5.0	Post, C100x60, 1600 mm, 5.0	0,375

Befestigungsmaterial · **Fasteners**

Nr. · no.	Beschreibung	Description	Qty/m
F5-131	Decklasche, f. M16, 115x40x6.0, RL	Plate, f. M16, 115x40x6.0, RL	0,75
040.00	HRK-Schraube, M16x27, 4.6	Panhead bolt, M16x27, 4.6	4,75
040.04	HRK-Schraube m. 6-kt., M16x45, 8.8	Panhead bolt w. hex., M16x45, 8.8	0,75
040.30	Scheibe, f. M16, Ø18x30x3.0	Washer, f. M16, Ø18x30x3.0	5,50

© 01/2022 Saferoad RRS GmbH · Changes and errors excepted