MONTAGETAFEL · ASSEMBLY DRAWING - PROFILE A

MegaRail eo

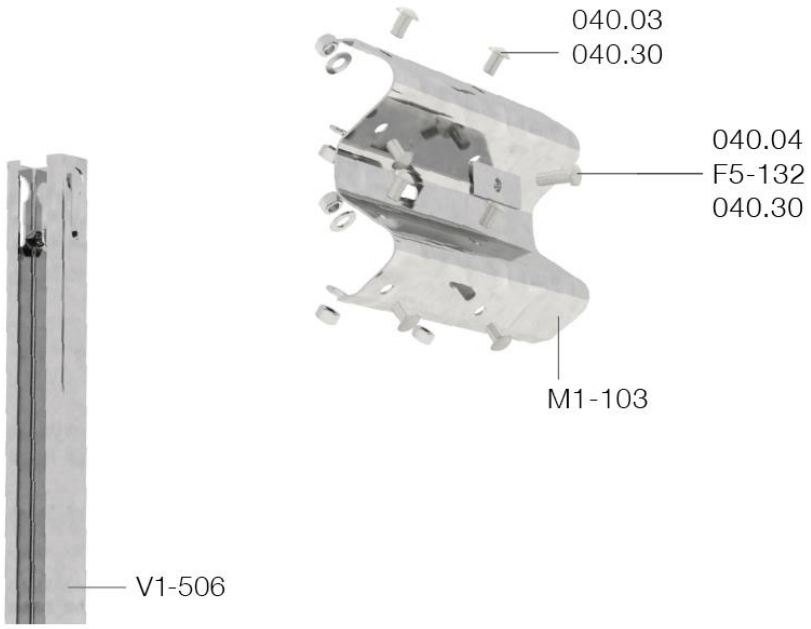

Die Abbildung beinhaltet die Modifikation M1 · The figure includes the modification M1

Bauteile · Main components

Nr. · no.	Beschreibung	Description	Qty/m
M1-103	SP-Holm, A, 4300 mm, 3.0	Beam, A, 4300 mm, 3.0	0,25
V1-506	Pfosten, C100x60, 1500 mm, 5.0	Post, C100x60, 1500 mm, 5.0	0,75

Befestigungsmaterial · Fasteners

Nr. · no.	Beschreibung	Description	Qty/m
F5-132	Decklasche, f. M16, 85x35x4.0, RL	Plate, f. M16, 85x35x4.0, RL	0,75
040.03	HRK-Schraube m. 6-kt., M16x30, 8.8	Panhead bolt w. hex., M16x30, 8.8	2,00
040.04	HRK-Schraube m. 6-kt., M16x45, 8.8	Panhead bolt w. hex., M16x45, 8.8	0,75
040.30	Scheibe, f. M16, Ø18x30x3.0	Washer, f. M16, Ø18x30x3.0	2,75

© 01/2022 Saferoad RRS GmbH · Changes and errors excepted

MONTAGETAFEL · ASSEMBLY DRAWING - PROFILE B

MegaRail eo

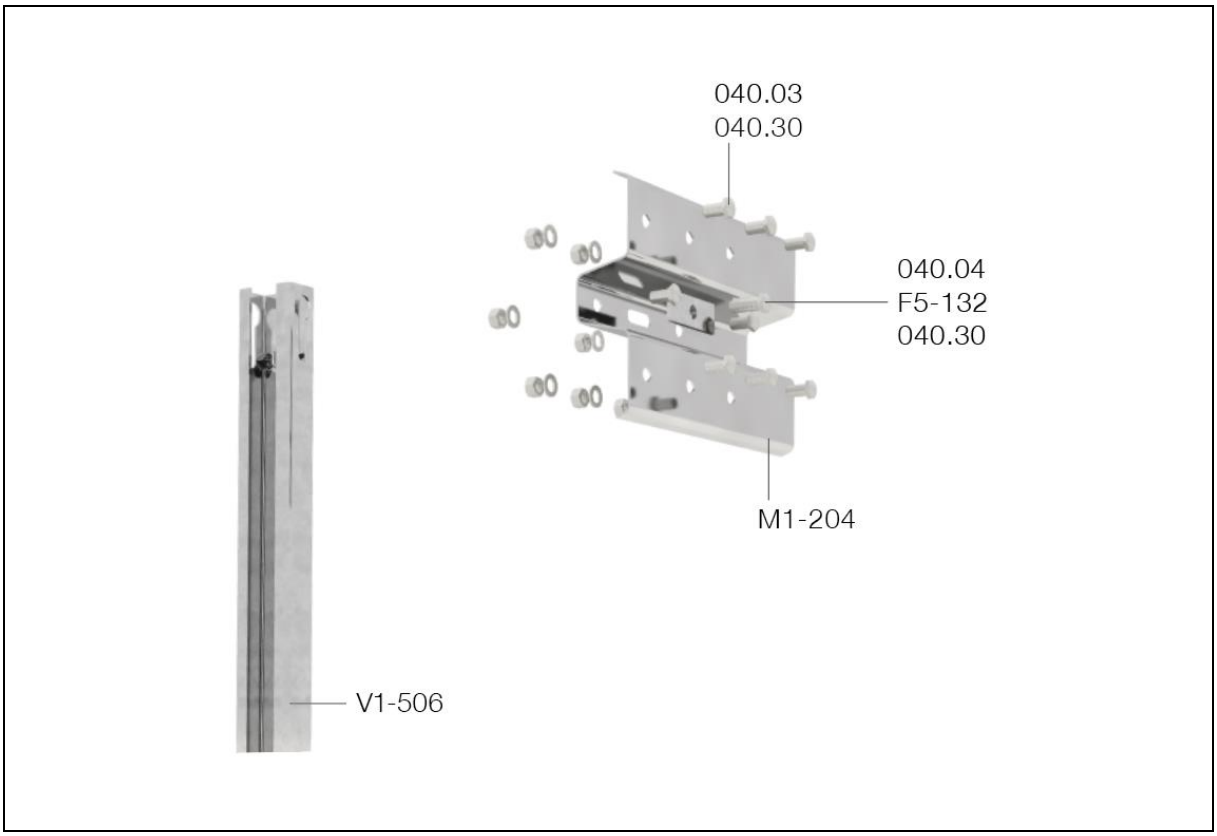

Bauteile · **Main components**

Nr. · no.	Beschreibung	Description	Qty/m
M1-204	SP-Holm, B, 4300 mm, 3.0	Beam, B, 4300 mm, 3.0	0,25
V1-506	Pfosten, C100x60, 1500 mm, 5.0	Post, C100x60, 1500 mm, 5.0	0,75

Befestigungsmaterial · **Fasteners**

Nr. · no.	Beschreibung	Description	Qty/m
F5-132	Decklasche, f. M16, 85x35x4.0, RL	Plate, f. M16, 85x35x4.0, RL	0,75
040.03	HRK-Schraube m. 6-kt., M16x30, 8.8	Panhead bolt w. hex., M16x30, 8.8	2,00
040.04	HRK-Schraube m. 6-kt., M16x45, 8.8	Panhead bolt w. hex., M16x45, 8.8	0,75
040.30	Scheibe, f. M16, Ø18x30x3.0	Washer, f. M16, Ø18x30x3.0	2,75

© 01/2022 Saferoad RRS GmbH · Changes and errors excepted