MONTAGETAFEL · ASSEMBLY DRAWING - PROFILE A

MegaRail bk

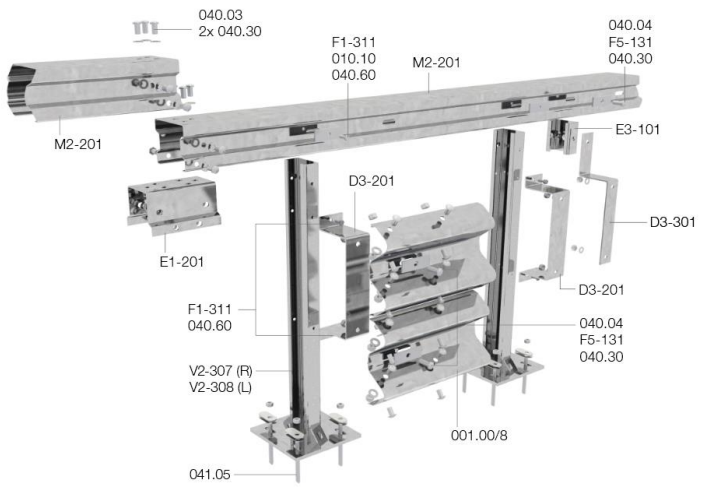

Die Abbildung beinhaltet die Modifikation M1 · The figure includes the modification M1

Bauteile · **Main components**

Nr. · no.	Beschreibung	Description	Qty/m	
			Left	Right
001.00/8	SP-Holm, A, 4300 mm, 3.0	Beam, A, 4300 mm, 3.0	0,50	
D3-201	Defo. Element, 150 mm, 5.0	Defo. Element, 150 mm, 5.0	1,00	
D3-301	Defo. Element, 150 mm, 5.0	Defo. Element, 150 mm, 5.0	0,50	
E1-201	KP-Verbinder, 2B, 240 mm, 4.0	BP joint, 2B, 240 mm, 4.0	0,25	
E3-101	Versteifungselement, C125x62.5, 5.0	Stiffener, C125x62.5, 5.0	0,50	
M2-201	KP, 2B, 3998 mm, 3.0	BP, 2B, 3998 mm, 3.0	0,25	
V2-307	Fpl.-Pfosten, C125x62.5, 1097 mm, 4%, R	Post w. plate, C125x62.5, 1097 mm, 4%, R		1,00
V2-308	Fpl.-Pfosten, C125x62.5, 1097 mm, 4%, L	Post w. plate, C125x62.5, 1097 mm, 4%, L	1,00	

Befestigungsmaterial · **Fasteners**

Nr. · no.	Beschreibung	Description	Qty/m
010.10	Decklasche, f. M10, 115x40x5.0, RL	Plate, f. M10, 115x40x5.0, RL	2,00
F5-131	Decklasche, f. M16, 115x40x6.0, RL	Plate, f. M16, 115x40x6.0, RL	4,00
040.00	HRK-Schraube, M16x27, 4.6	Panhead bolt, M16x27, 4.6	4,00
040.03	HRK-Schraube m. 6-kt., M16x30, 8.8	Panhead bolt w. hex., M16x30, 8.8	3,50
040.04	HRK-Schraube m. 6-kt., M16x45, 8.8	Panhead bolt w. hex., M16x45, 8.8	4,00
040.30	Scheibe, f. M16, Ø18x30x3.0	Washer, f. M16, Ø18x30x3.0	15,00
F1-311	6-kt.-Schraube, M10x30, 4.6	Hexagonal bolt, M10x30, 4.6	4,00
040.60	Scheibe, f. M10, Ø11x20x2.0	Washer, f. M10, Ø11x20x2.0	4,00

Verankerung · **Anchorage**

Nr. · no.	Beschreibung	Description	Qty/m
041.05	Verbundankerset, M16x185, 8.8	Anchor set, M16x185, 8.8	4,00
041.22/3	Dichtungsplatte. 300x300	Gasket plate, 300x300	1,00

© 01/2022 Saferoad RRS GmbH · Changes and errors excepted

MONTAGETAFEL · ASSEMBLY DRAWING - PROFILE B

MegaRail bk

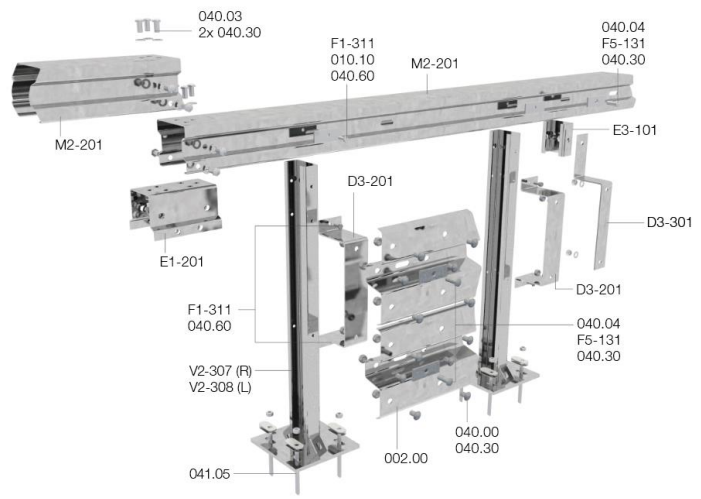

Bauteile · Main components

Nr. · no.	Beschreibung	Description	Qty/m	
			Left	Right
002.00	SP-Holm, B, 4300 mm, 3.0	Beam, B, 4300 mm, 3.0	0,50	
D3-201	Defo. Element, 150 mm, 5.0	Defo. Element, 150 mm, 5.0	1,00	
D3-301	Defo. Element, 150 mm, 5.0	Defo. Element, 150 mm, 5.0	0,50	
E1-201	KP-Verbinder, 2B, 240 mm, 4.0	BP joint, 2B, 240 mm, 4.0	0,25	
E3-101	Versteifungselement, C125x62.5, 5.0	Stiffener, C125x62.5, 5.0	0,50	
M2-201	KP, 2B, 3998 mm, 3.0	BP, 2B, 3998 mm, 3.0	0,25	
V2-307	Fpl.-Pfosten, C125x62.5, 1097 mm, 4%, R	Post w. plate, C125x62.5, 1097 mm, 4%, R		1,00
V2-308	Fpl.-Pfosten, C125x62.5, 1097 mm, 4%, L	Post w. plate, C125x62.5, 1097 mm, 4%, L	1,00	

Befestigungsmaterial · Fasteners

Nr. · no.	Beschreibung	Description	Qty/m
010.10	Decklasche, f. M10, 115x40x5.0, RL	Plate, f. M10, 115x40x5.0, RL	2,00
F5-131	Decklasche, f. M16, 115x40x6.0, RL	Plate, f. M16, 115x40x6.0, RL	4,00
040.00	HRK-Schraube, M16x27, 4.6	Panhead bolt, M16x27, 4.6	3,00
040.03	HRK-Schraube m. 6-kt., M16x30, 8.8	Panhead bolt w. hex., M16x30, 8.8	3,50
040.04	HRK-Schraube m. 6-kt., M16x45, 8.8	Panhead bolt w. hex., M16x45, 8.8	4,00
040.30	Scheibe, f. M16, Ø18x30x3.0	Washer, f. M16, Ø18x30x3.0	14,00
F1-311	6-kt.-Schraube, M10x30, 4.6	Hexagonal bolt, M10x30, 4.6	4,00
040.60	Scheibe, f. M10, Ø11x20x2.0	Washer, f. M10, Ø11x20x2.0	4,00

Verankerung · Anchorage

Nr. · no.	Beschreibung	Description	Qty/m
041.05	Verbundankerset, M16x185, 8.8	Anchor set, M16x185, 8.8	4,00
041.22/3	Dichtungsplatte. 300x300	Gasket plate, 300x300	1,00

© 01/2022 Saferoad RRS GmbH · Changes and errors excepted