SAFEROAD®

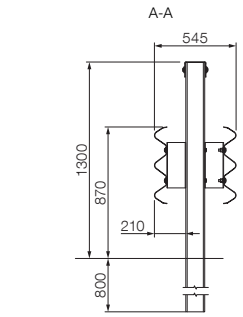

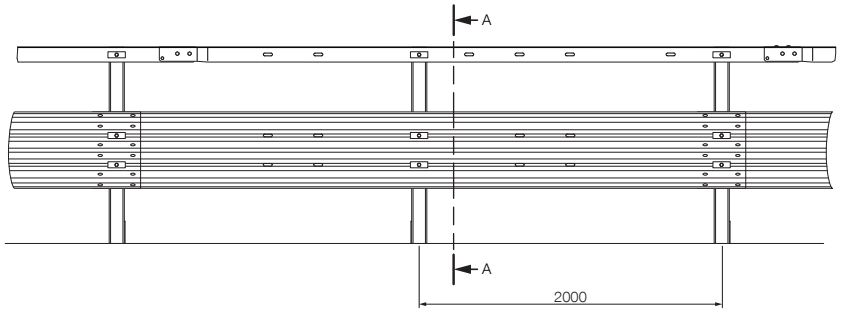

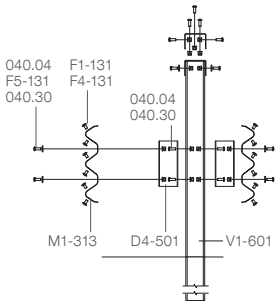

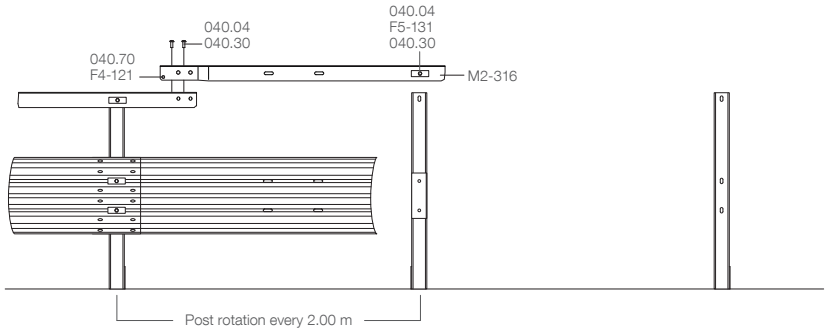

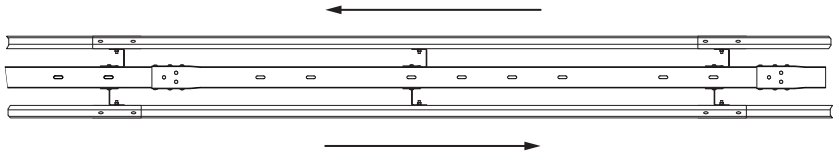

Parts

Art. no.	Description	Qty / 4.0 m
D4-501	Spacer, 125 mm	4
M1-313	Beam, 3W, 4.320 mm, 2.5	2
M2-316	BP, U140x100, 4.240 mm, 5.0	1
V1-601	Post, C125x100, 2.100 mm, 5.0	2
F5-131	Plate M16, 115x40x6 mm	12
040.04	Panhead bolt M16x45, 8.8	27
F1-131	Panhead bolt M16x30, 8.8	24
040.30	Washer, Ø18x30	27
F4-131	Washer, Ø18x38	24
040.70	Panhead bolt M12x35, 8.8	2
F4-121	Washer, Ø13.5x24	2

Fasteners

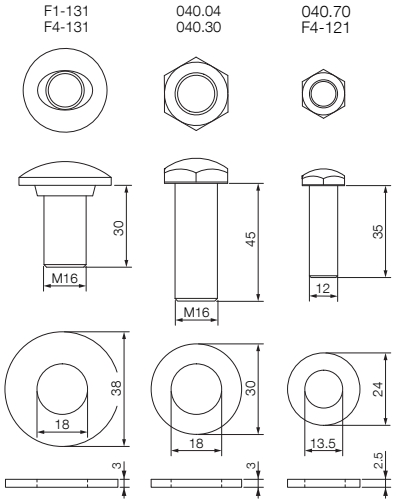

Attention! Change of the part numbers: 010.40 = F5-131 / 040.08 = F1-131 / 040.38 = F4-131 / 040.72 = F4-121

Systemübersicht · System overview · Présentation du système · Panoramica del sistema · Descripción general del sistema · Visão geral do sistema · Přehled systému Sisteme Genel Bakış · Przegląd systemu · Обзор системы · Prezentare generală sistem · Overzicht van het systeem · Systemtegning · Systemritning · نظرة عامة للنظام

SafeStar 441d

H4b · W4 · A

© 10/2021 Saferoad RRS GmbH