SAFEROAD®

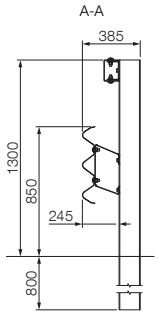

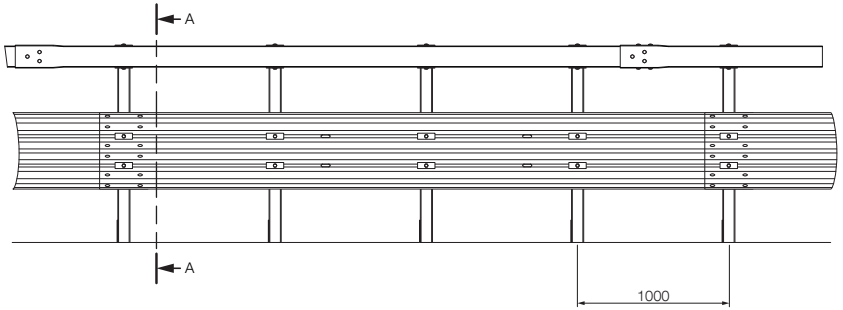

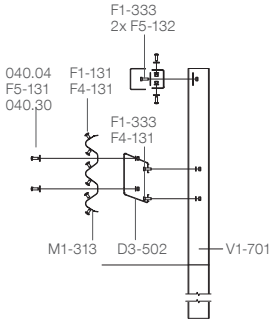

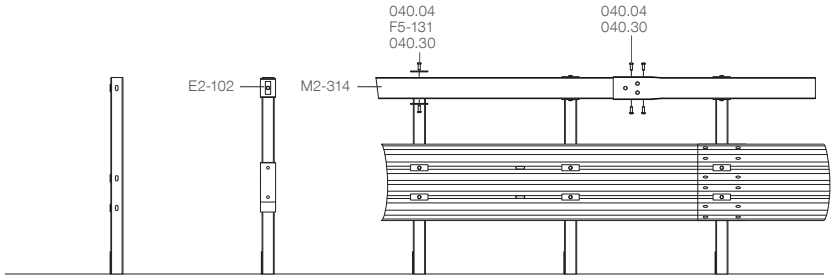

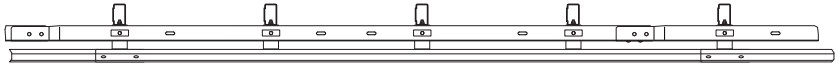

Parts

Art. no.	Description	Qty / 4.0 m
D3-502	Spacer, 160 mm	4
E2-102	BP bracket	4
M1-313	Beam, 3W, 4.320 mm, 2.5	1
M2-314	BP, U140x100, 4.240 mm, 4.0	1
V1-701	Post, C140x80, 2.100 mm, 5.0	4
F5-131	Plate M16, 115x40x6 mm	16
F5-132	Plate M16, 85x35x4 mm	8
040.04	Panhead bolt M16x45, 8.8	23
F1-131	Panhead bolt M16x30, 8.8	12
F1-333	Panhead bolt M16x45, 10.9	12
040.30	Washer, Ø18x30	23
F4-131	Washer, Ø18x38	20

Fasteners

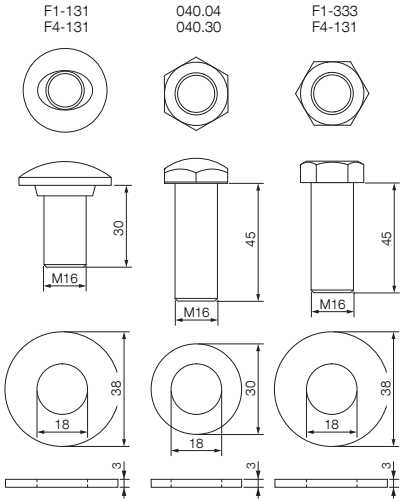

Attention! Change of the part numbers: 010.40 = F5-131 / 010.50 = F5-132 / 040.08 = F1-131 / 040.38 = F4-131

Systemübersicht · System overview · Présentation du système · Panoramica del sistema · Descripción general del sistema · Visão geral do sistema · Přehled systému Sisteme Genel Bakış · Przegląd systemu · Обзор системы · Prezentare generală sistem · Overzicht van het systeem · Systemtegning · Systemritning · نظرة عامة للنظام

SafeStar 431

H4b · W3 · A

© 10/2021 Saferoad RRS GmbH