SAFEROAD®

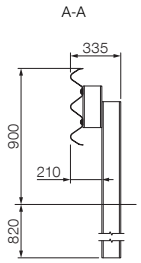


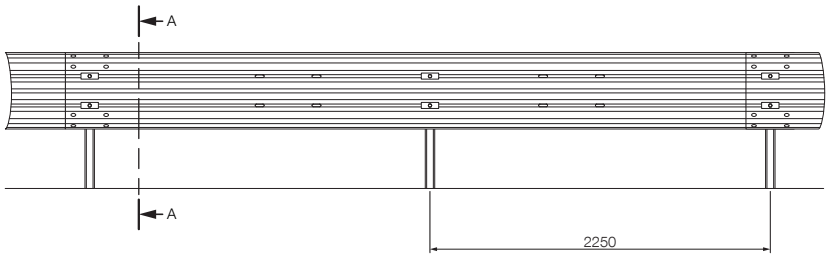


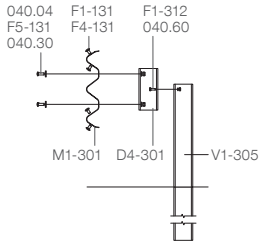


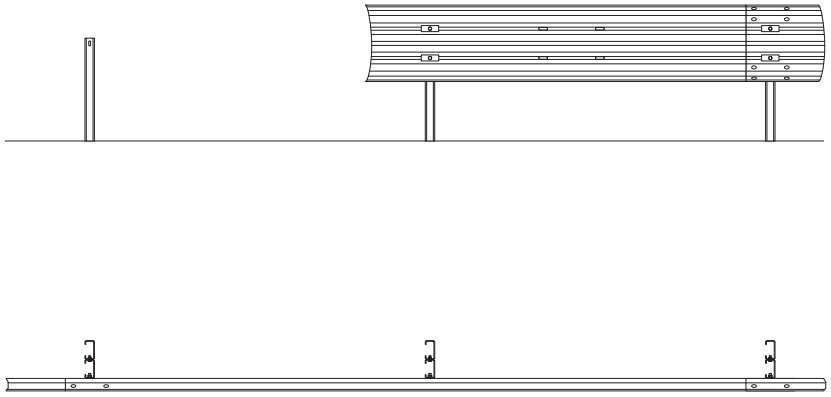

## Parts

| Art. no. | Description | Qty / 4.5 m |
|---|---|---|
| D4-301 | Spacer, C125, 275 mm | 2 |
| M1-301 | Beam, 3W, 4.820 mm, 2.4 | 1 |
| V1-305 | Post, C125, 1.500 mm, 4.0 | 2 |
| | | |
| F5-131 | Plate M16 | 4 |
| 040.04 | Panhead bolt M16x45, 8.8 | 4 |
| F1-131 | Panhead bolt M16x30, 8.8 | 8 |
| 040.30 | Washer, Ø18x30 | 4 |
| F4-131 | Washer, Ø18x38 | 8 |
| F1-312 | Hexagonal bolt, M10x30, 8.8 | 2 |
| 040.60 | Washer, Ø11x20 | 2 |

## Fasteners

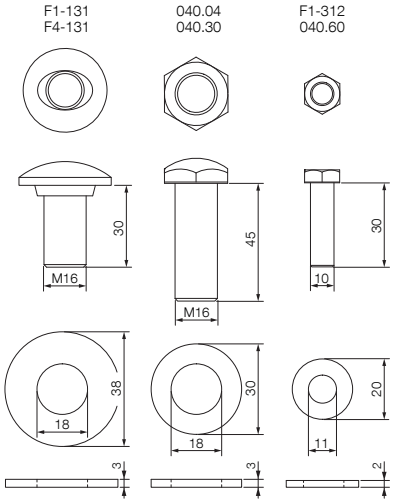


Attention! Change of the part numbers: 001.54 = M1-301 / 007.50 = D4-301 / 063.28 = V1-305 / 010.40 = F5-131 / 040.08 = F1-131 / 040.38 = F4-131 / 040.46 = F1-312

**Systemübersicht** · System overview · Présentation du système · Panoramica del sistema · Descripción general del sistema · Visão geral do sistema · Přehled systému Sisteme Genel Bakış · Przegląd systemu · Обзор системы · Prezentare generală sistem · Overzicht van het systeem · Systemtegning · Systemritning · نظرة عامة للنظام

# SafeStar 261

H2 · W6 · A

© 03/2021 Saferoad RRS GmbH