SAFEROAD®

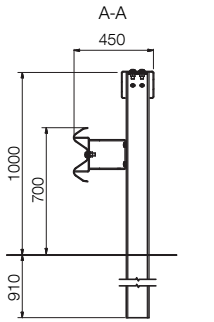

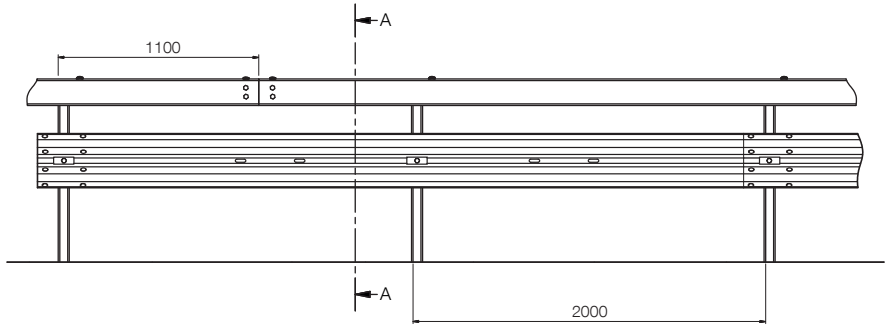

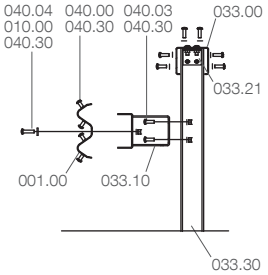

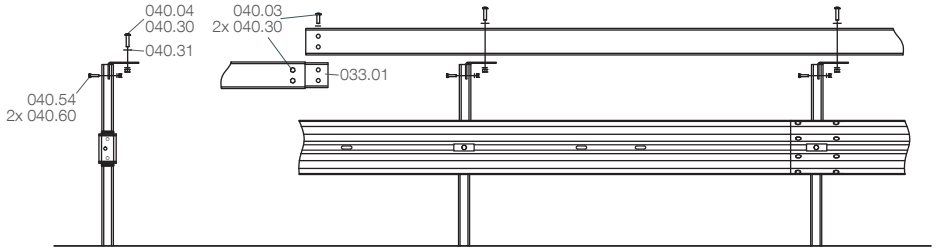

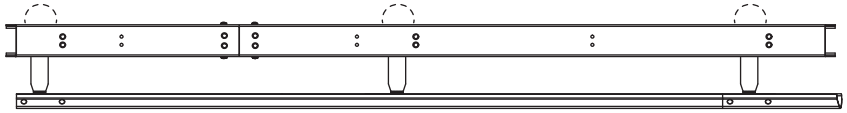

Parts

Art. no.	Description	Number/m
001.00	Beam A, 4.300 mm, 3.0	0.25
010.00	Plate M16, TL	0.50
033.00	Box profile, 3.998 mm, 3.0	0.25
033.01	Box profile joint	0.25
033.10	Spacer, A, 200 mm	0.50
033.21	Attachment angle	0.50
033.30	Post C125, 1.900 mm	0.50
040.00	Panhead bolt M16x27, 4.6	2.00
040.03	Panhead bolt M16x30, 8.8	4.00
040.04	Panhead bolt M16x45, 8.8	1.50
040.30	Washer Ø18x30	10.50
040.31	Washer Ø18x40, 4.0	1.00
040.54	Hexagonal bolt M10x45, 8.8	1.00
040.60	Washer Ø11x20	2.00

Fasteners

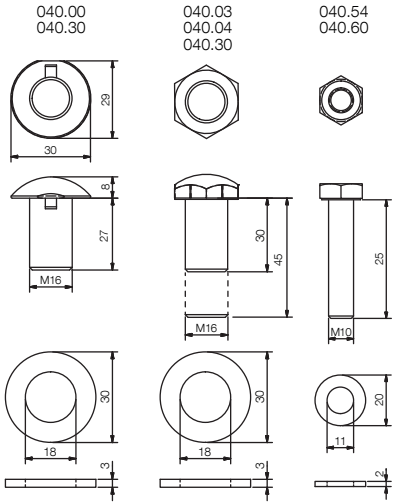

Systemübersicht · System overview · Présentation du système · Panoramica del sistema · Descripción general del sistema · Visão geral do sistema · Přehled systému
Sisteme Genel Bakış · Przegląd systemu · Обзор системы · Prezentare generală sistem · Overzicht van het systeem · Systemtegning · Systemritning · نظرة عامة للنظام

Super-Rail Eco 1A/MÜF

H2 · W4 · A

© 11/2018 Saferoad RRS GmbH, Please note that forwarding this drawing without permission from Saferoad RSS GmbH is a break of copyright.

SAFEROAD®

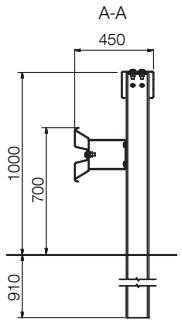

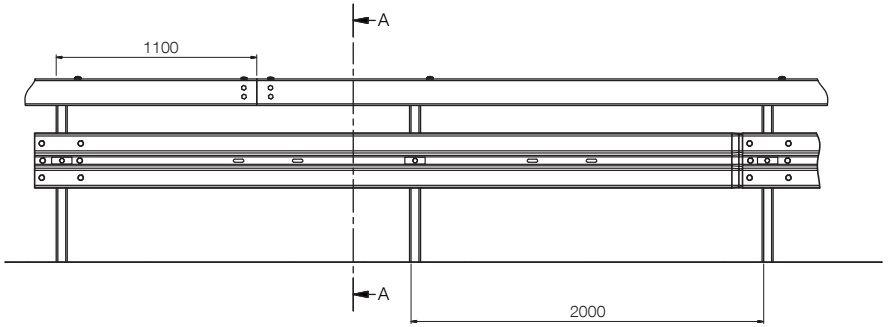

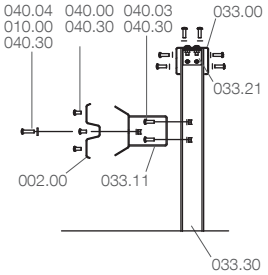

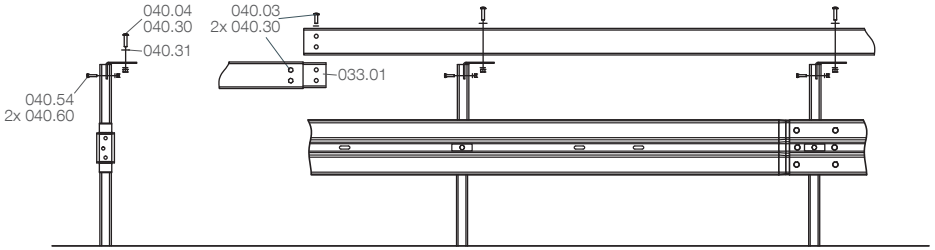

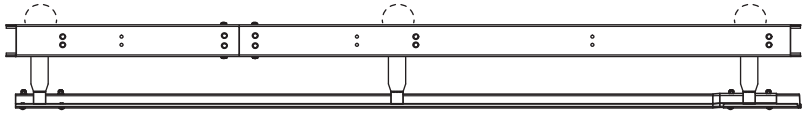

Parts

Art. no.	Description	Number/m
002.00	Beam B, 4.300 mm, 3.0	0.25
010.00	Plate M16, TL	0.50
033.00	Box profile, 3.998 mm, 3.0	0.25
033.01	Box profile joint	0.25
033.11	Spacer, B, 200 mm	0.50
033.21	Attachment angle	0.50
033.30	Post C125, 1.900 mm	0.50
040.00	Panhead bolt M16x27, 4.6	1.50
040.03	Panhead bolt M16x30, 8.8	4.00
040.04	Panhead bolt M16x45, 8.8	1.50
040.30	Washer Ø18x30	10.00
040.31	Washer Ø18x40, 4.0	1.00
040.54	Hexagonal bolt M10x45, 8.8	1.00
040.60	Washer Ø11x20	2.00

Fasteners

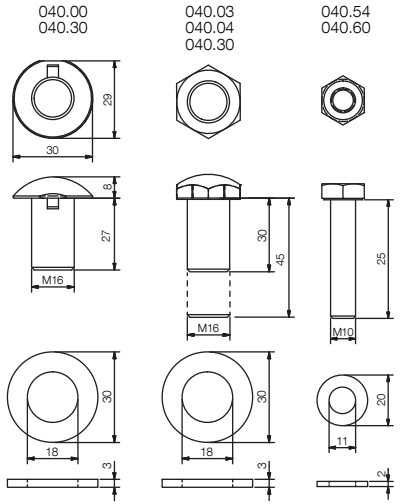

Systemübersicht · System overview · Présentation du système · Panoramica del sistema · Descripción general del sistema · Visão geral do sistema · Přehled systému
Sisteme Genel Bakış · Przegląd systemu · Обзор системы · Prezentare generală sistem · Overzicht van het systeem · Systemtegning · Systemritning · نظرة عامة للنظام

Super-Rail Eco 1A/MÜF

H2 · W4 · A

© 11/2018 Saferoad RRS GmbH, Please note that forwarding this drawing without permission from Saferoad RSS GmbH is a break of copyright.