MONTAGETAFEL · ASSEMBLY DRAWING

SafeStar 261

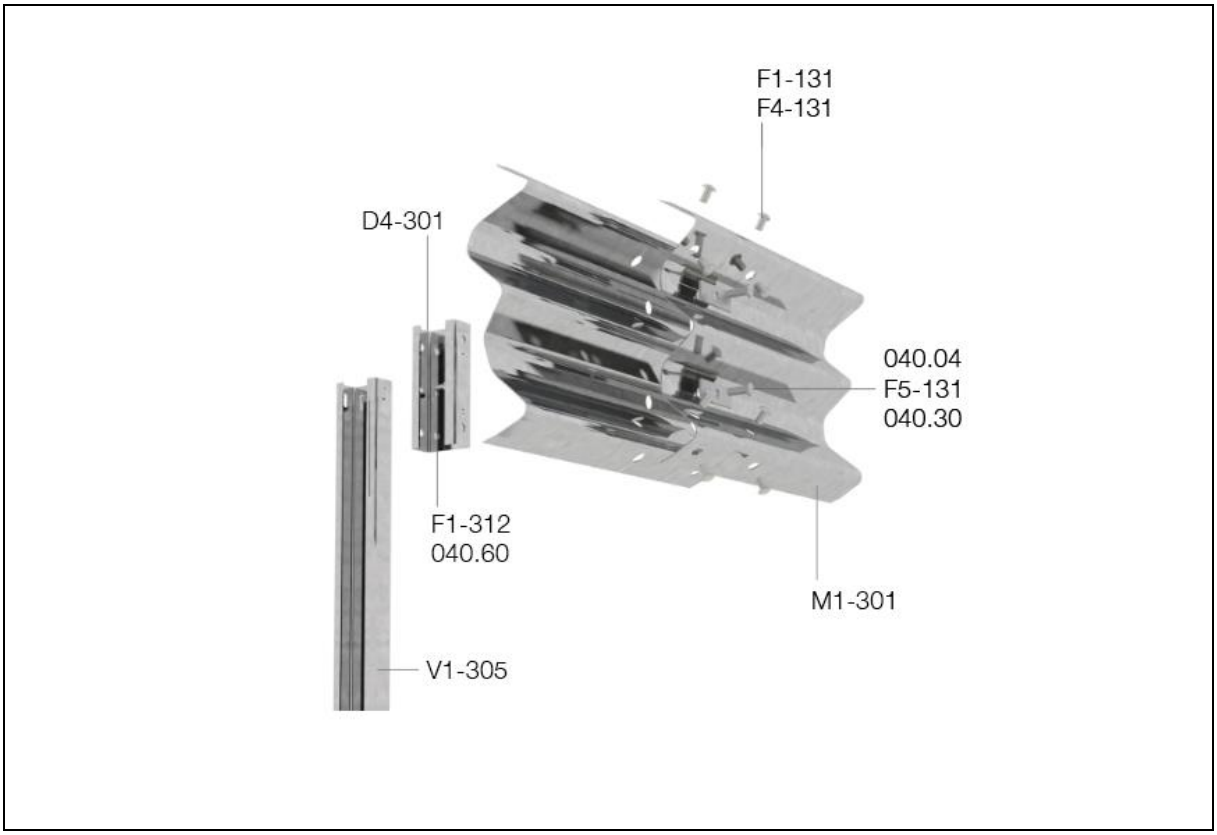

Bauteile · Main components

Nr. · no.	Beschreibung	Description	Qty/4.5 m
D4-301	Abstandhalter, C125x62.5, 275 mm, 5.0	Distance element, C125x62.5, 275 mm, 5.0	2,00
M1-301	SP-Holm, 3W, 4820 mm, 2.4	Beam, 3W, 4820 mm, 2.4	1,00
V1-305	Pfosten, C125x62.5, 1500 mm, 4.0	Post, C125x62.5, 1500 mm, 4.0	2,00

Befestigungsmaterial · Fasteners

Nr. · no.	Beschreibung	Description	Qty/m
F5-131	Decklasche, f. M16, 115x40x6.0, RL	Plate, f. M16, 115x40x6.0, RL	4,00
040.04	HRK-Schraube m. 6-kt., M16x45, 8.8	Panhead bolt w. hex., M16x45, 8.8	4,00
F1-131	HRK-Schraube, M16x30, 8.8	Panhead bolt, M16x30, 8.8	8,00
040.30	Scheibe, f. M16, Ø18x30x3.0	Washer, f. M16, Ø18x30x3.0	4,00
F4-131	Scheibe, f. M16, Ø18x38x3.0	Washer, f. M16, Ø18x38x3.0	8,00
F1-312	6-kt.-Schraube, M10x30, 8.8	Hexagonal bolt, M10x30, 8.8	2,00
040.60	Scheibe, f. M10, Ø11x20x2.0	Washer, f. M10, Ø11x20x2.0	2,00

© 01/2022 Saferoad RRS GmbH · Changes and errors excepted