SAFEROAD®

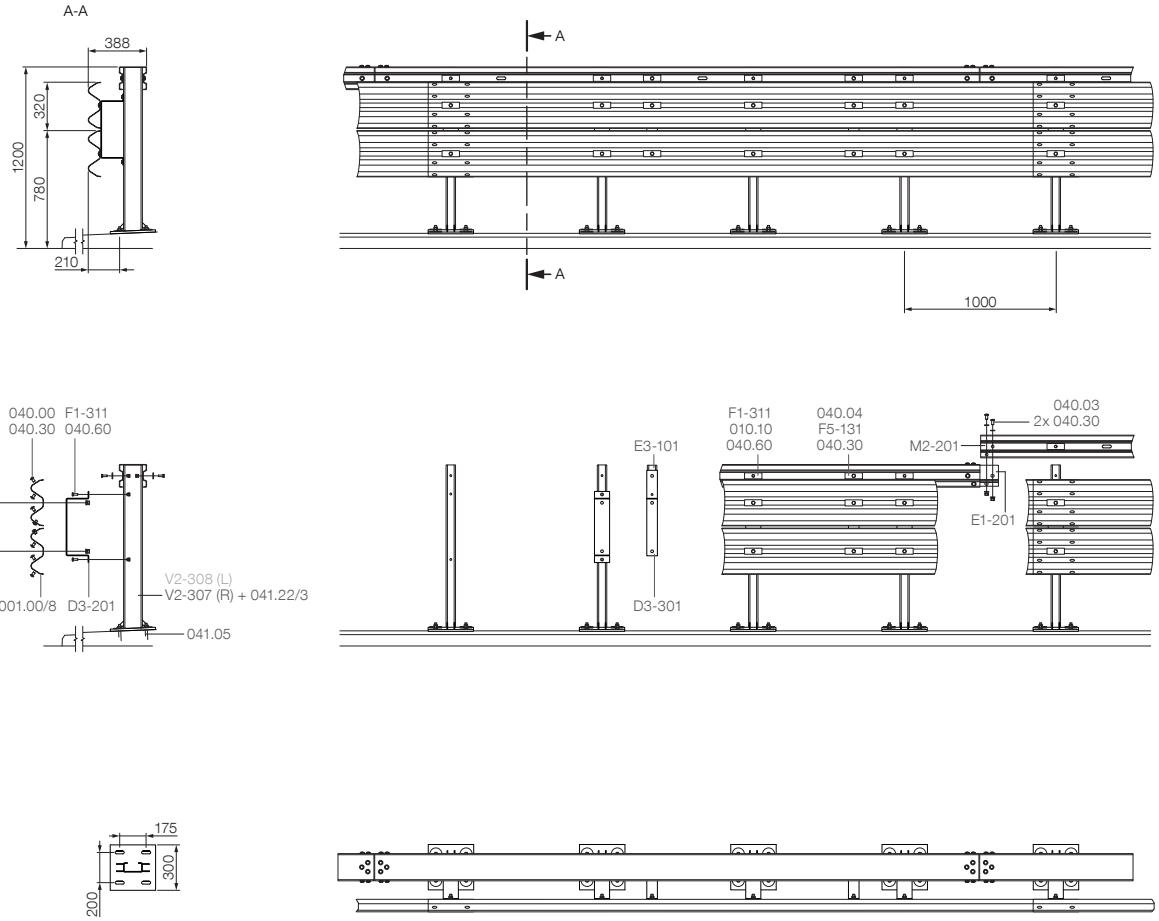

Parts

Art. no.	Description	Qty / m
001.00/8	Beam, A, 4.300 mm, 3.0	0.5
D3-201	Defo.-element, 150 mm	1
D3-301	Bracket, 150 mm	0.5
E1-201	BP joint, 2B	0.25
E3-101	BP stiffener	0.5
M2-201	BP, 2B, 3.998 mm, 3.0	0.25
V2-307	Post w. plate, 1.097 mm, 4%, R	1
010.10	Plate M10	2
F5-131	Plate M16	4
040.00	Panhead bolt M16x27, 4.6	4
040.03	Panhead bolt M16x30, 8.8	3.5
040.04	Panhead bolt, M16x45, 8.8	4
040.30	Washer, Ø18x30	15
F1-311	Hexagonal bolt M10x30, 4.6	4
040.60	Washer, Ø11x20	4
041.05	Anchor set, M16x185, 8.8	4
041.22/3	Gasket plate, 300x300, MR bk	1

Fasteners

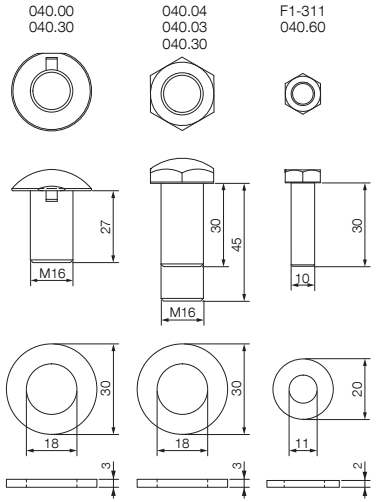

Attention! Change of the part numbers: 025.94 = M2-201 / 025.94/1 = E1-201 / 004.22 = D3-201 / 004.23 = D3-301 / 007.30 = E3-101 / 069.40 = V2-307 / 069.41 = V2-308 / 041.41 = F1-311 / 010.40 = F5-131

Systemübersicht · System overview · Présentation du système · Panoramica del sistema · Descripción general del sistema · Visão geral do sistema · Přehled systému Sisteme Genel Bakış · Przegląd systemu · Обзор системы · Prezentare generală sistem · Overzicht van het systeem · Systemtegning · Systemritning · نظرة عامة للنظام

MegaRail bk

H4b · W4 · A | L4b · W4 · B | H2 · W2 · A | L2 · W4 · B | N2 · W1 · B

© 07/2022 Saferoad RRS GmbH

SAFEROAD®

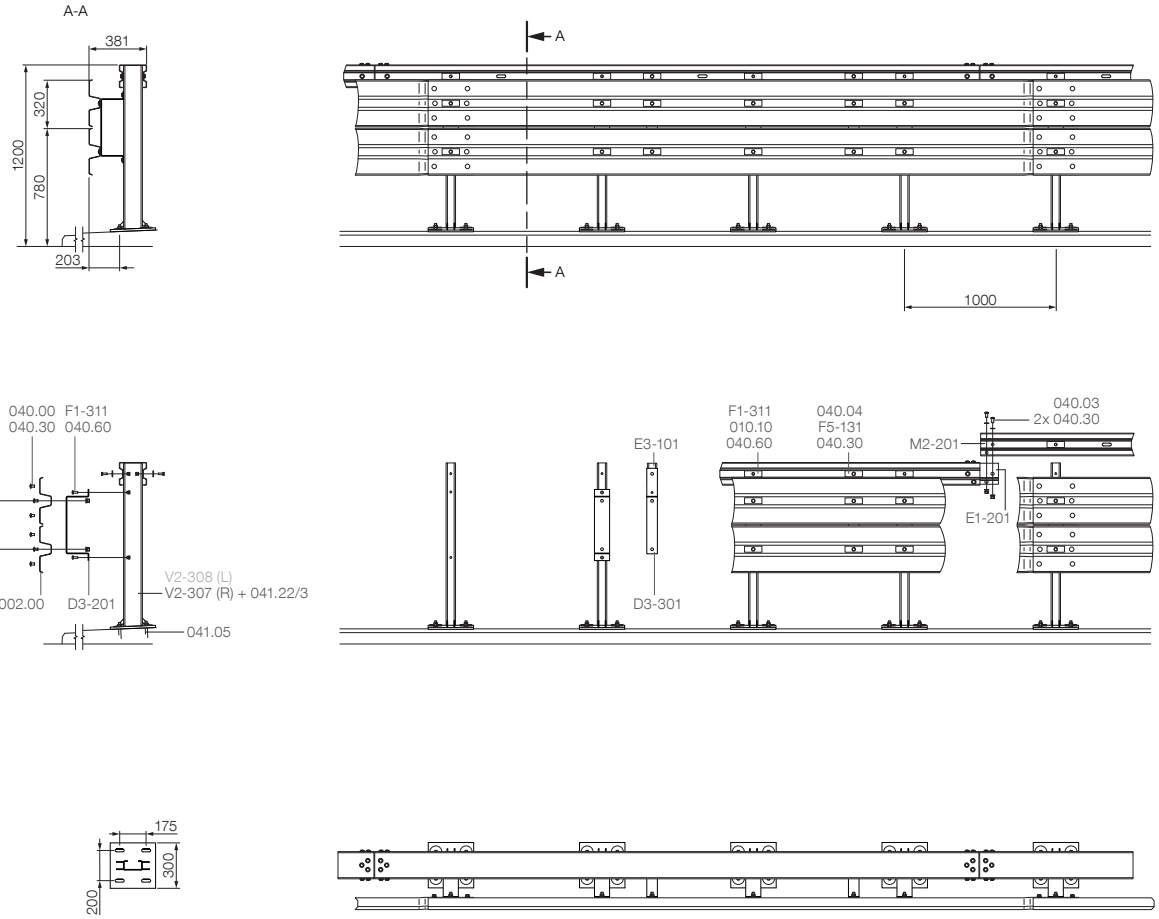

Parts

Art. no.	Description	Qty / m
002.00	Beam, B, 4.300 mm, 3.0	0.5
D3-201	Defo.-element, 150 mm	1
D3-301	Bracket, 150 mm	0.5
E1-201	BP joint, 2B	0.25
E3-101	BP stiffener	0.5
M2-201	BP, 2B, 3.998 mm, 3.0	0.25
V2-307	Post w. plate, 1.097 mm, 4%, R	1
010.10	Plate M10	2
F5-131	Plate M16	4
040.00	Panhead bolt M16x27, 4.6	3
040.03	Panhead bolt M16x30, 8.8	3.5
040.04	Panhead bolt, M16x45, 8.8	4
040.30	Washer, Ø18x30	14
F1-311	Hexagonal bolt M10x30, 4.6	4
040.60	Washer, Ø11x20	4
041.05	Anchor set, M16x185, 8.8	4
041.22/3	Gasket plate, 300x300, MR bk	1

Fasteners

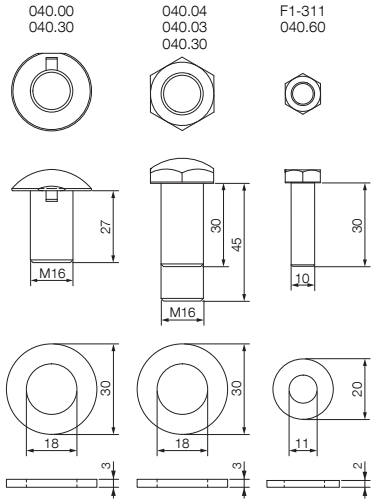

Attention! Change of the part numbers: 025.94 = M2-201 / 025.94/1 = E1-201 / 004.22 = D3-201 / 004.23 = D3-301 / 007.30 = E3-101 / 069.40 = V2-307 / 069.41 = V2-308 / 041.41 = F1-311 / 010.40 = F5-131

Systemübersicht · System overview · Présentation du système · Panoramica del sistema · Descripción general del sistema · Visão geral do sistema · Přehled systému Sisteme Genel Bakış · Przegląd systemu · Обзор системы · Prezentare generală sistem · Overzicht van het systeem · Systemtegning · Systemritning · نظرة عامة للنظام

MegaRail bk

H4b · W4 · A | L4b · W4 · B | H2 · W2 · A | L2 · W4 · B | N2 · W1 · B

© 07/2022 Saferoad RRS GmbH