MONTAGETAFEL · ASSEMBLY DRAWING

SafeStar 232

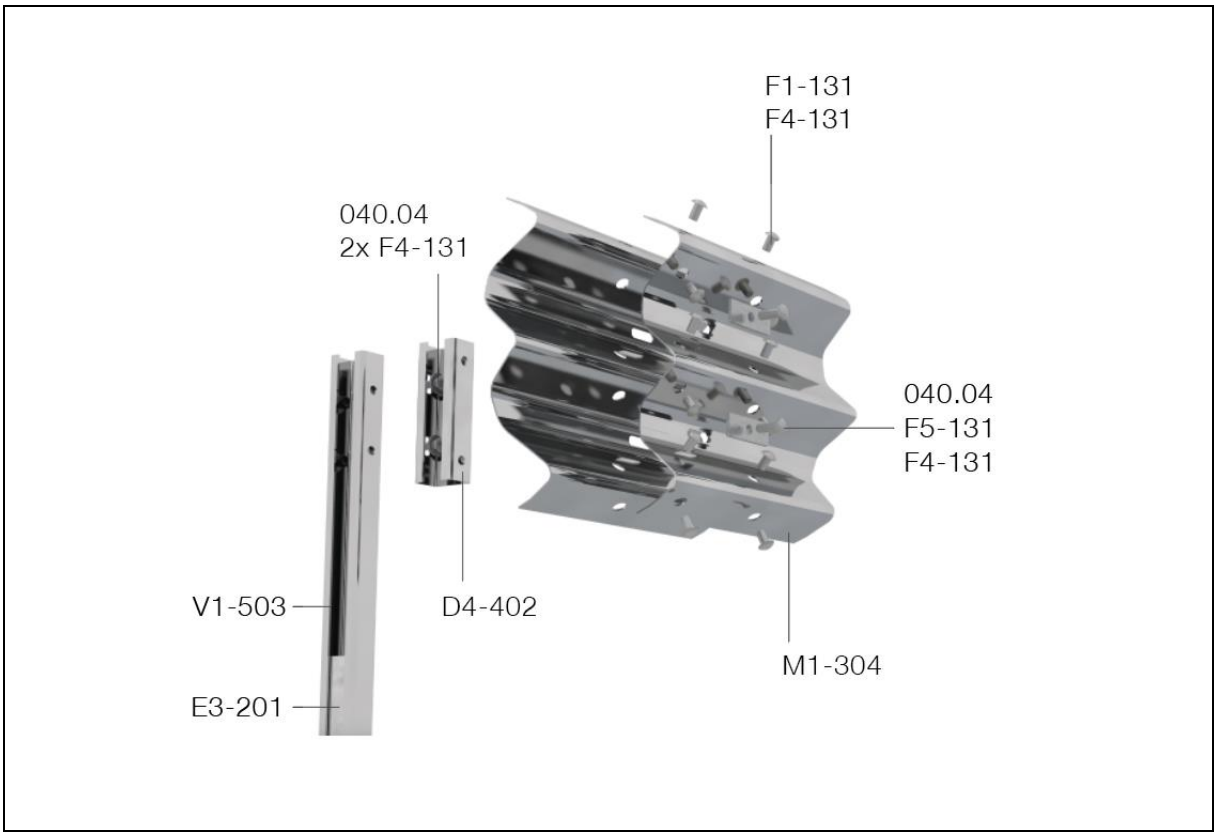

Bauteile · Main components

Nr. · no.	Beschreibung	Description	Qty/4.5 m
E3-201	Versteifungselement, U85x45, 230 mm, 4.0	Stiffener, U85x45, 230 mm, 4.0	2,00
D4-402	Abstandhalter, C100x60, 275 mm, 5.0	Distance element, C100x60, 275 mm, 5.0	2,00
M1-304	SP-Holm, 3W, 4820 mm, 3.0	Beam, 3W, 4820 mm, 3.0	1,00
V1-503	Pfosten, C100x60, 1600 mm, 5.0	Post, C100x60, 1600 mm, 5.0	2,00

Befestigungsmaterial · Fasteners

Nr. · no.	Beschreibung	Description	Qty/m
F5-131	Decklasche, f. M16, 115x40x6.0, RL	Plate, f. M16, 115x40x6.0, RL	4,00
040.04	HRK-Schraube m. 6-kt., M16x45, 8.8	Panhead bolt w. hex., M16x45, 8.8	8,00
F1-131	HRK-Schraube, M16x30, 8.8	Panhead bolt, M16x30, 8.8	12,00
F4-131	Scheibe, f. M16, Ø18x38x3.0	Washer, f. M16, Ø18x38x3.0	24,00

© 01/2022 Saferoad RRS GmbH · Changes and errors excepted