MONTAGETAFEL · ASSEMBLY DRAWING - PROFILE A

MegaRail ec 2.2

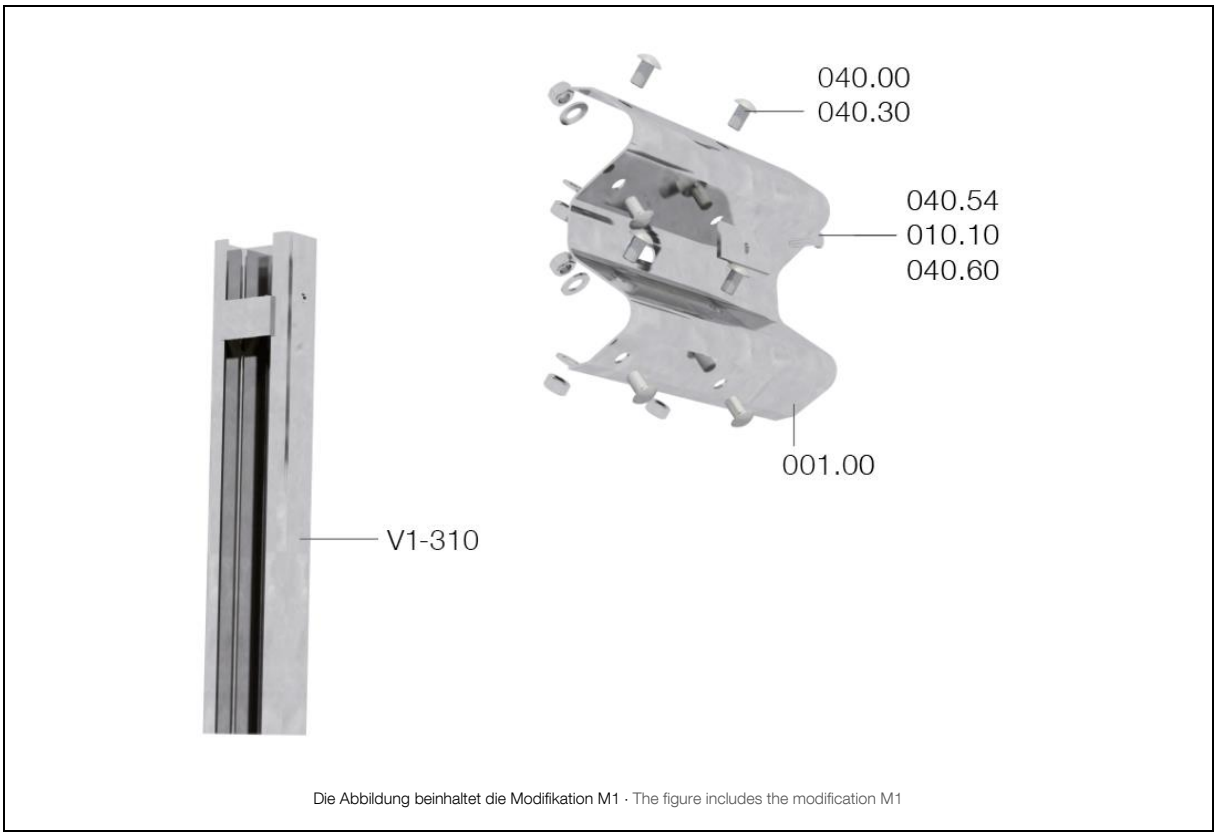

Die Abbildung beinhaltet die Modifikation M1 · The figure includes the modification M1

Bauteile · Main components

Nr. · no.	Beschreibung	Description	Qty/m
001.00	SP-Holm, A, 4300 mm, 3.0	Beam, A, 4300 mm, 3.0	0,25
V1-310	Pfosten, C125x62.5, 1600 mm, 4.0	Post, C125x62.5, 1600 mm, 4.0	0,75

Befestigungsmaterial · Fasteners

Nr. · no.	Beschreibung	Description	Qty/m
010.10	Decklasche, f. M10, 115x40x5.0, RL	Plate, f. M10, 115x40x5.0, RL	0,75
040.00	HRK-Schraube, M16x27, 4.6	Panhead bolt, M16x27, 4.6	2,00
040.30	Scheibe, f. M16, Ø18x30x3.0	Washer, f. M16, Ø18x30x3.0	2,00
040.54	6-kt.-Schraube, M10x45, 8.8	Hexagonal bolt, M10x45, 8.8	0,75
040.60	Scheibe, f. M10, Ø11x20x2.0	Washer, f. M10, Ø11x20x2.0	0,75

© 07/2021 Saferoad RRS GmbH · Changes and errors excepted

MONTAGETAFEL · ASSEMBLY DRAWING - PROFILE B

MegaRail ec 2.2

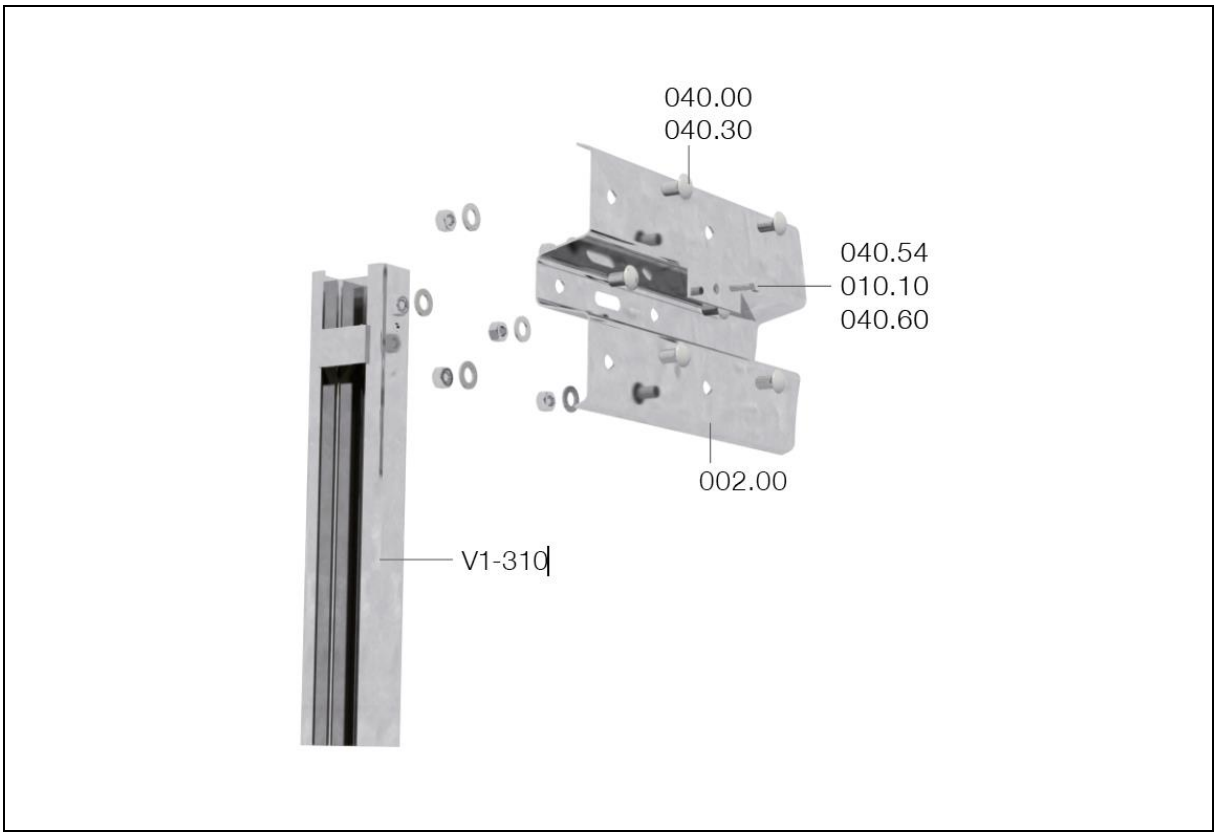

Bauteile · **Main components**

Nr. · no.	Beschreibung	Description	Qty/m
002.00	SP-Holm, B, 4300 mm, 3.0	Beam, B, 4300 mm, 3.0	0,25
V1-310	Pfosten, C125x62.5, 1600 mm, 4.0	Post, C125x62.5, 1600 mm, 4.0	0,75

Befestigungsmaterial · **Fasteners**

Nr. · no.	Beschreibung	Description	Qty/m
010.10	Decklasche, f. M10, 115x40x5.0, RL	Plate, f. M10, 115x40x5.0, RL	0,75
040.00	HRK-Schraube, M16x27, 4.6	Panhead bolt, M16x27, 4.6	1,50
040.30	Scheibe, f. M16, Ø18x30x3.0	Washer, f. M16, Ø18x30x3.0	1,50
040.54	6-kt.-Schraube, M10x45, 8.8	Hexagonal bolt, M10x45, 8.8	0,75
040.60	Scheibe, f. M10, Ø11x20x2.0	Washer, f. M10, Ø11x20x2.0	0,75

© 07/2021 Saferoad RRS GmbH · Changes and errors excepted