MONTAGETAFEL · ASSEMBLY DRAWING

MegaRail ep 6.0

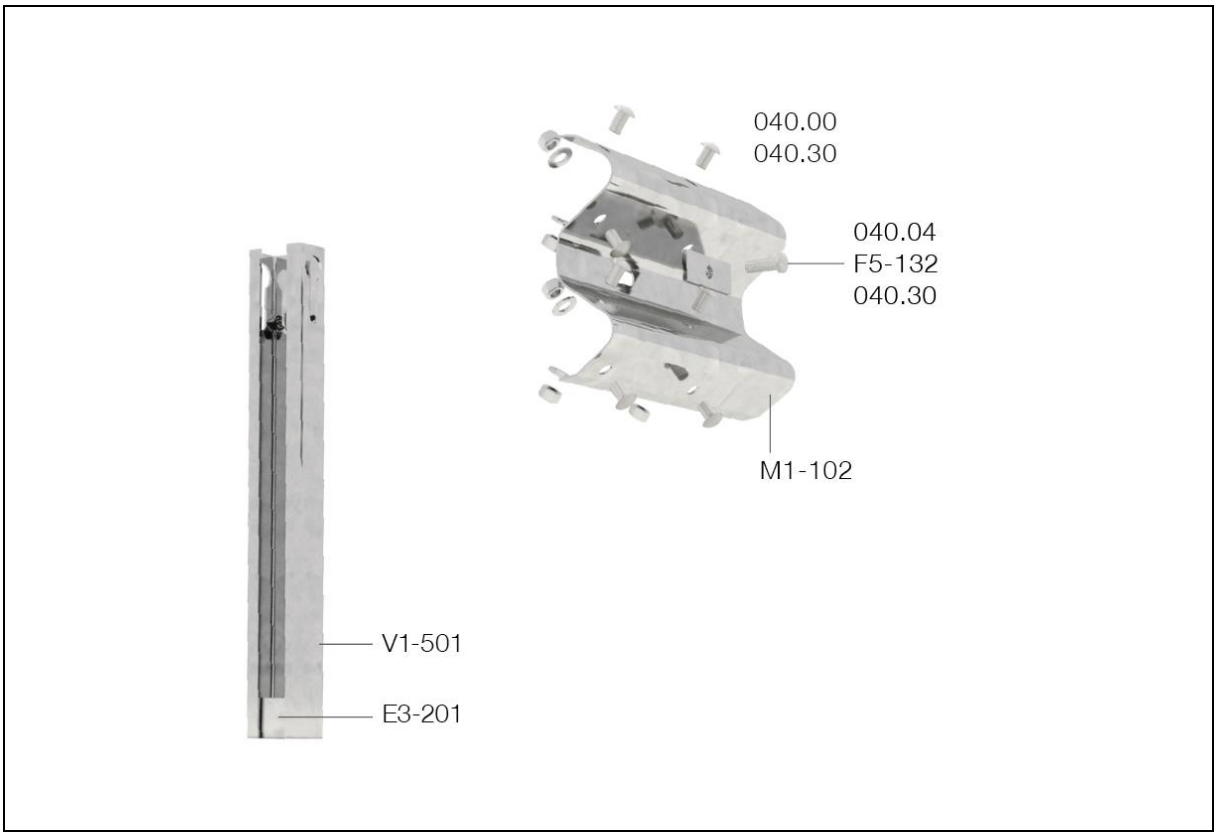

Bauteile · **Main components**

Nr. · no.	Beschreibung	Description	Qty/m
E3-201	Versteifungselement, U85x45, 230 mm, 4.0	Stiffener, U85x45, 230 mm, 4.0	0,17
M1-102	SP-Holm, A, 4300 mm, 2.5	Beam, A, 4300 mm, 2.5	0,25
V1-501	Pfosten, C100x60, 1500 mm, 4.0	Post, C100x60, 1500 mm, 4.0	0,17

Befestigungsmaterial · **Fasteners**

Nr. · no.	Beschreibung	Description	Qty/m
F5-132	Decklasche, f. M16, 85x35x4.0, RL	Plate, f. M16, 85x35x4.0, RL	0,17
040.00	HRK-Schraube, M16x27, 4.6	Panhead bolt, M16x27, 4.6	2,00
040.04	HRK-Schraube m. 6-kt., M16x45, 8.8	Panhead bolt w. hex., M16x45, 8.8	0,17
040.30	Scheibe, f. M16, Ø18x30x3.0	Washer, f. M16, Ø18x30x3.0	2,17

© 01/2022 Saferoad RRS GmbH · Changes and errors excepted