SAFEROAD®

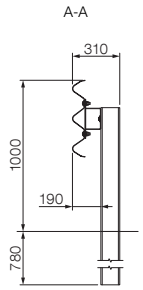

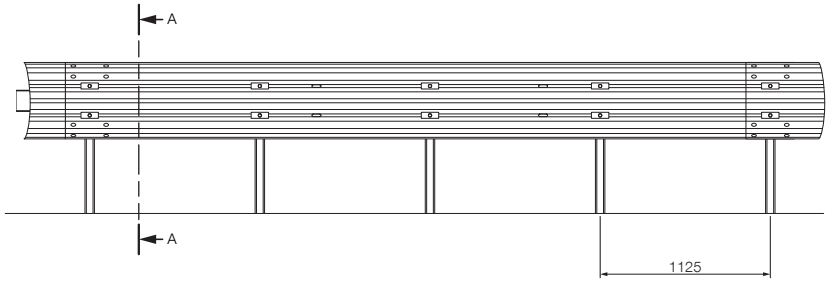

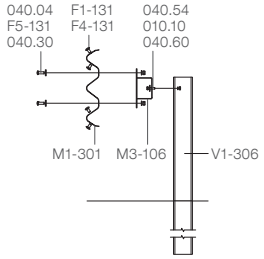

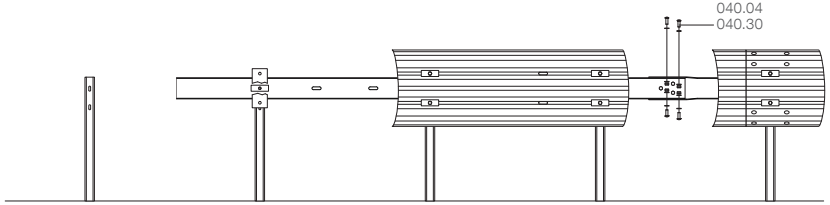

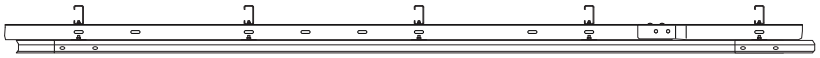

Parts

Art. no.	Description	Qty / 4.5 m
M1-301	Beam, 3W, 4.820 mm, 2.4	1
M3-106	Reinf. BP, 4.740 mm, 5.0	1
V1-306	Post, C125, 1.600 mm, 5.0	4
010.10	Plate M10	4
F5-131	Plate M16	8
040.04	Panhead bolt M16x45, 8.8	15
F1-131	Panhead bolt M16x30, 8.8	8
040.30	Washer, Ø18x30	15
F4-131	Washer, Ø18x38	8
040.54	Hexagonal bolt, M10x45, 8.8	4
040.60	Washer, Ø11x20	4

Fasteners

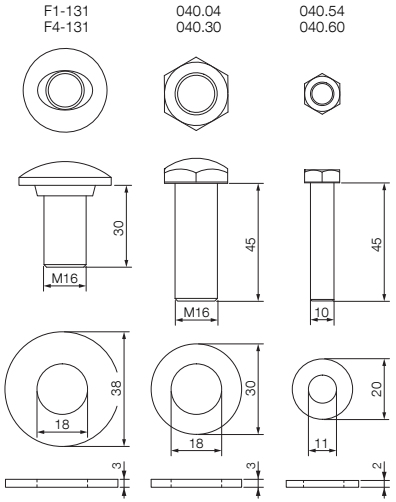

Attention! Change of the part numbers: 001.54 = M1-301 / 063.29 = V1-306 / 010.40 = F5-131 / 040.08 = F1-131 / 040.38 = F4-131

Systemübersicht · System overview · Présentation du système · Panoramica del sistema · Descripción general del sistema · Visão geral do sistema · Přehled systému Sisteme Genel Bakış · Przegląd systemu · Обзор системы · Prezentare generală sistem · Overzicht van het systeem · Systemtegning · Systemritning · نظرة عامة للنظام

SafeStar 351

H3 · W5 · A

© 03/2021 Saferoad RRS GmbH