SAFEROAD®

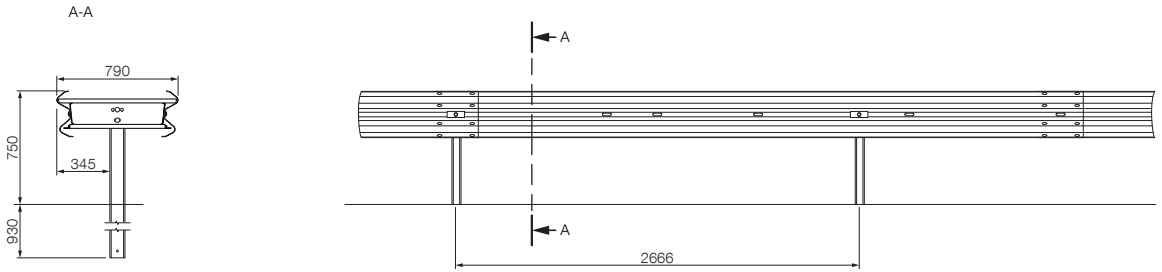

Parts

Art. no.	Description	Qty / m
D2-102	Spacer, 780 mm	0.375
M1-102	Beam, A, 4.300 mm, 2.5	0.5
V1-502	Post, C100x60, 1.600 mm, 5.0	0.375
F5-131	Plate M16	0.75
040.00	Panhead bolt M16x27, 4.6	4.75
040.04	Panhead bolt M16x45, 8.8	0.75
040.30	Washer, Ø18x30	5.5

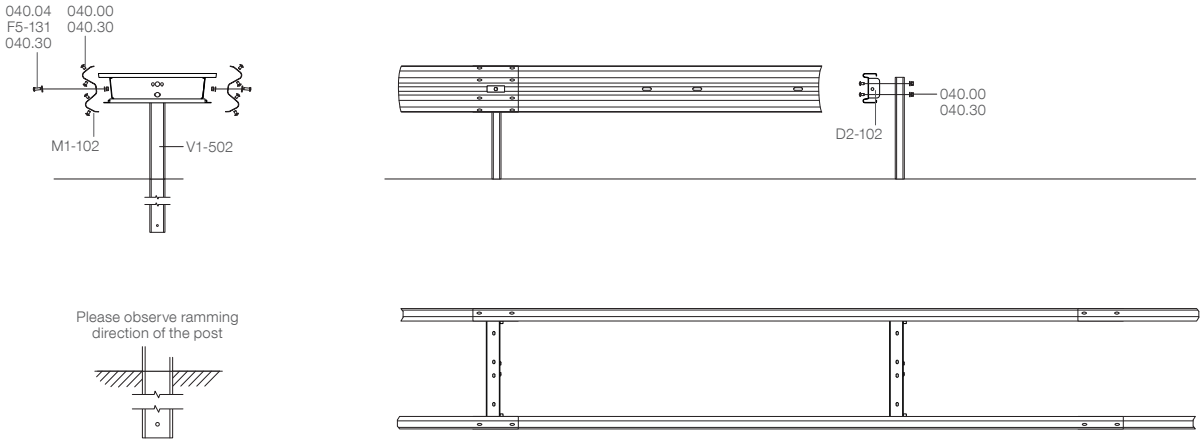

Fasteners

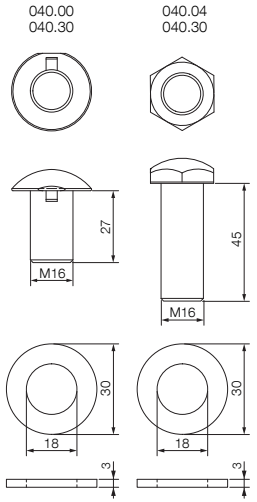

Attention! Change of the part numbers: 001.58 = M1-102 / 006.96 = D2-102 / 063.16 = V1-502 / 010.40 = F5-131

Systemübersicht · System overview · Présentation du système · Panoramica del sistema · Descripción general del sistema · Visão geral do sistema · Přehled systému Sisteme Genel Bakış · Przegląd systemu · Обзор системы · Prezentare generală sistem · Overzicht van het systeem · Systemtegning · Systemritning · نظرة عامة للنظام

MegaRail dx

H2 · W4 · A

© 04/2021 Saferoad RRS GmbH