MONTAGETAFEL · ASSEMBLY DRAWING

SafeStar 441d

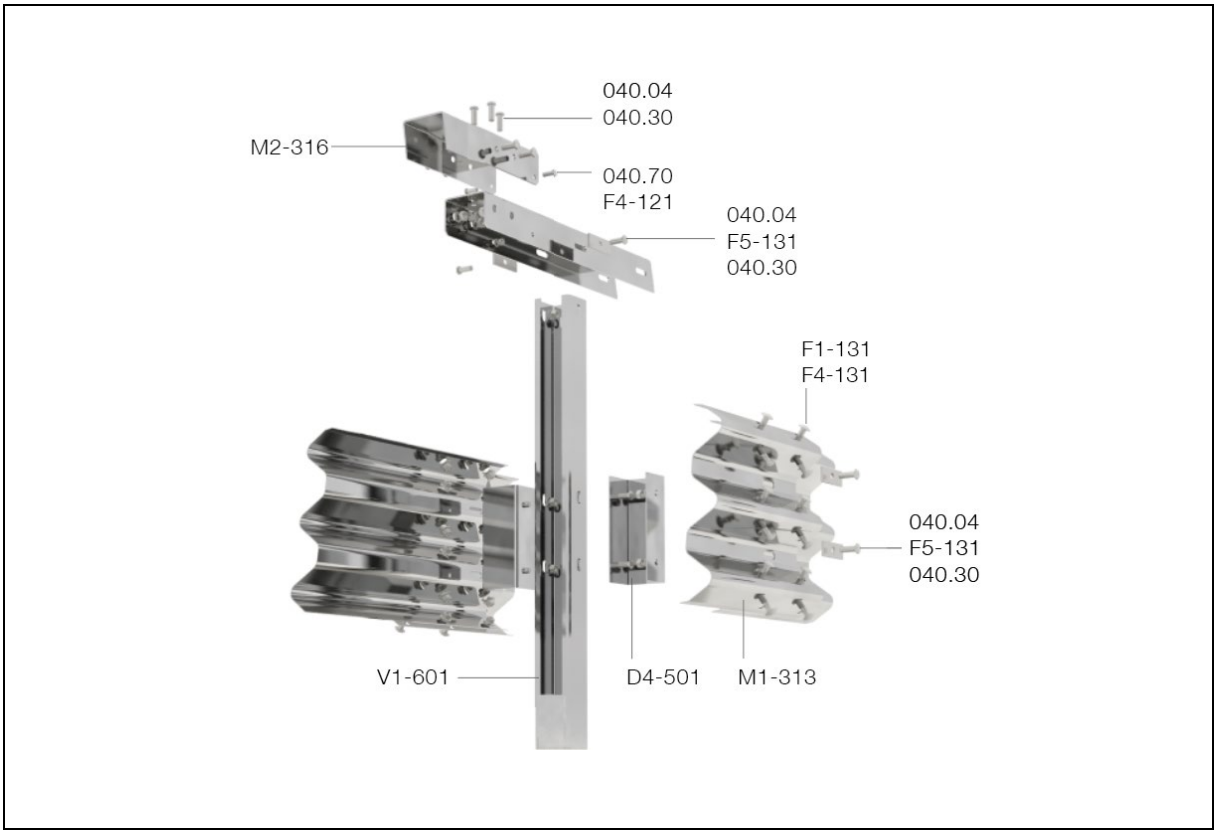

Bauteile · Main components

Nr. · no.	Beschreibung	Description	Qty/m
D4-501	Abstandhalter, U125x100, 300 mm, 4.0	Distance element, U125x100, 300 mm, 4.0	1,00
M1-313	SP-Holm, 3W, 4320 mm, 2.5	Beam, 3W, 4320 mm, 2.5	0,50
M2-316	KP, U140x100, 4240 mm, 5.0, we	BP, U140x100, 4240 mm, 5.0, we	0,25
V1-601	Pfosten, C125x100, 2100 mm, 5.0	Post, C125x100, 2100 mm, 5.0	0,50

Befestigungsmaterial · Fasteners

Nr. · no.	Beschreibung	Description	Qty/m
F5-131	Decklasche, f. M16, 115x40x6.0, RL	Plate, f. M16, 115x40x6.0, RL	3,00
040.04	HRK-Schraube m. 6-kt., M16x45, 8.8	Panhead bolt w. hex., M16x45, 8.8	6,75
F1-131	HRK-Schraube m. oval, M16x30, 8.8	Panhead bolt w. shoulder, M16x30, 8.8	6,00
040.30	Scheibe, f. M16, Ø18x30x3.0	Washer, f. M16, Ø18x30x3.0	6,75
F4-131	Scheibe, f. M16, Ø18x38x3.0	Washer, f. M16, Ø18x38x3.0	6,00
040.70	HRK-Schraube m. 6-kt., M12x35, 8.8	Panhead bolt w. hex., M12x35, 8.8	0,50
F4-121	Scheibe, f. M12, Ø13.5x24x2.5	Washer, f. M12, Ø13.5x24x2.5	0,50

© 11/2021 Saferoad RRS GmbH · Changes and errors excepted