SAFEROAD®

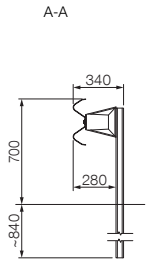


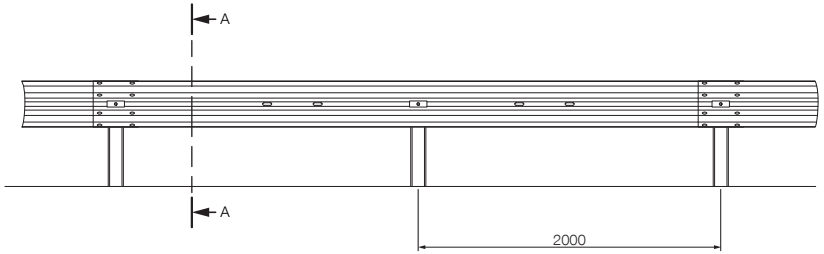


## Parts

| Art. no. | Description | Qty / m |
|---|---|---|
| M1-102 | Beam, A, 4.300 mm, 2.5 | 0.25 |
| D1-301 | Spacer NF | 0.5 |
| V1-204 | Post, C100x50, 1.500 mm, 4.0 | 0.5 |
| | | |
| 010.10 | Plate M10, 115x40x5.0 mm | 1 |
| F5-132 | Plate M16, 85x35x4.0 mm | 1 |
| 040.00 | Panhead bolt M16x27, 4.6 | 2 |
| 040.04 | Panhead bolt M16x45, 8.8 | 0.5 |
| 040.30 | Washer, Ø18x30 | 2 |
| 040.54 | Hexagonal bolt, M10x45, 8.8 | 0.5 |

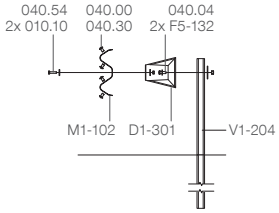


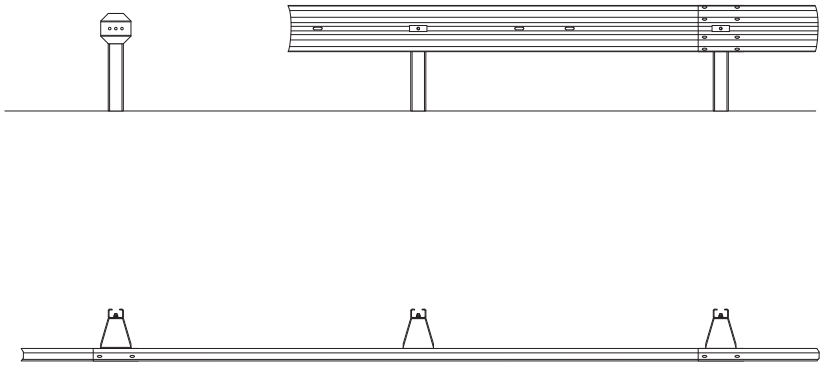

## Fasteners

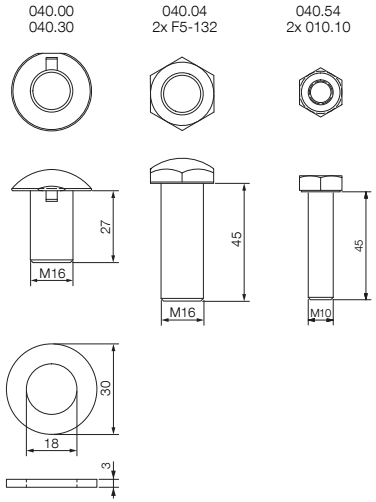


**Systemübersicht** · System overview · Présentation du système · Panoramica del sistema · Descripción general del sistema · Visão geral do sistema · Přehled systému
Sisteme Genel Bakış · Przegląd systemu · Обзор системы · Prezentare generală sistem · Overzicht van het systeem · Systemtegning · Systemritning · نظرة عامة للنظام

# **MegaRail** GS2 CE

N2 · W4 · A

© 08/2022 Saferoad RRS GmbH