SAFEROAD®

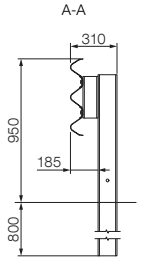

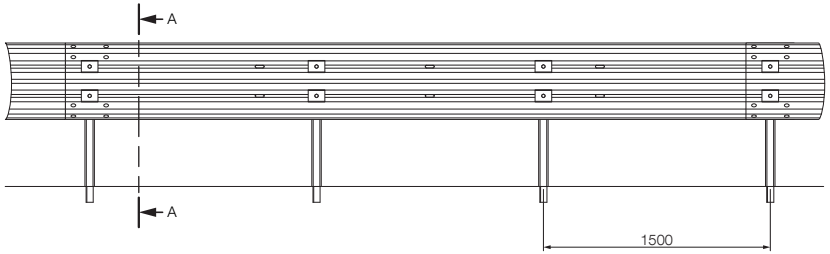

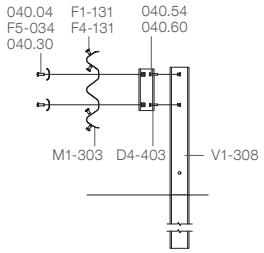

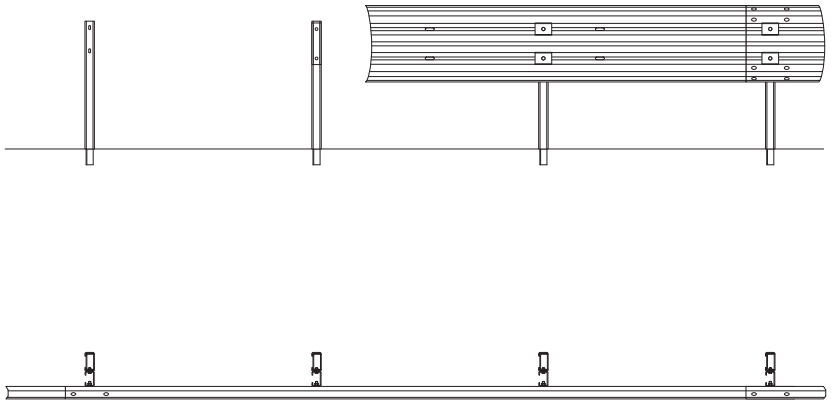

Installation of post stiffener

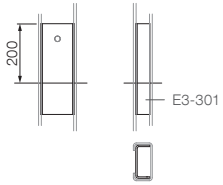

Attention! Change of the part numbers: 001.57 = M1-303 / 040.08 = F1-131 / 040.38 = F4-131

Parts

Art. no.	Description	Qty / 4.5 m
E3-301	Post stiffener, U100x47	3
D4-403	Spacer, C100x60, 275 mm	3
M1-303	Beam, 3W, 4.820 mm, 2.5	1
V1-308	Post, C125, 1.650 mm, 5.0	3
F5-034	Curved Plate M16	6
040.04	Panhead bolt M16x45, 8.8	6
F1-131	Panhead bolt M16x30, 8.8	8
040.30	Washer, Ø18x30	6
F4-131	Washer, Ø18x38	8
040.54	Hexagonal bolt, M10x45, 8.8	6
040.60	Washer, Ø11x20	6

Fasteners

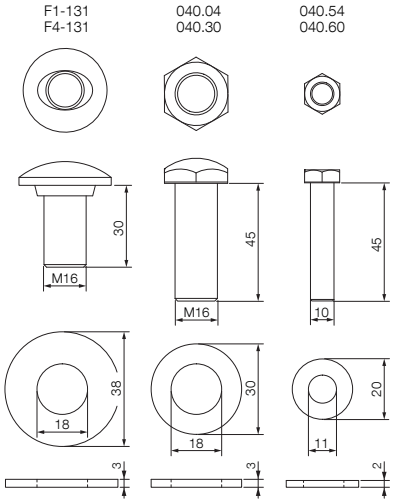

Systemübersicht · System overview · Présentation du système · Panoramica del sistema · Descripción general del sistema · Visão geral do sistema · Přehled systému Sisteme Genel Bakış · Przegląd systemu · Обзор системы · Prezentare generală sistem · Overzicht van het systeem · Systemtegning · Systemritning · نظرة عامة للنظام

SafeStar 221

H2 · W2 · A

© 03/2021 Saferoad RRS GmbH