H2 | W4 | A | VI5

MegaRail eo



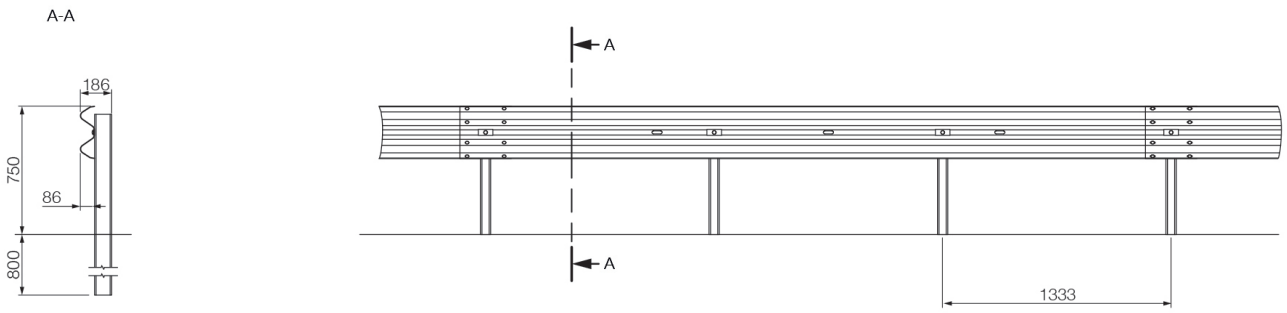

TECHNICAL SPECIFICATIONS

Working width (m) 1.20	Dyn. deflection (m) 1.10	Vehicle intrusion (m) 1.70
Construction width (m) 0.18	Construction height (m) 0.75	Post distance (m) 1.33
Application area driven in ground	Type Single	Test length (m) 44.00

© Saferoad RRS GmbH

CE

SAFEROAD®

H2 | W4 | A | VI5

MegaRail eo



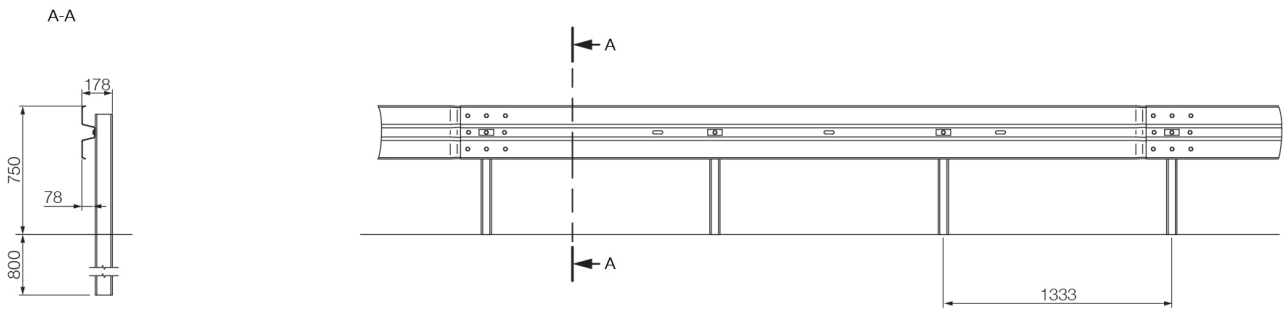

TECHNICAL SPECIFICATIONS

Working width (m) 1.20	Dyn. deflection (m) 1.10	Vehicle intrusion (m) 1.70
Construction width (m) 0.18	Construction height (m) 0.75	Post distance (m) 1.33
Application area driven in ground	Type Single	Test length (m) 44.00

© Saferoad RRS GmbH

CE

SAFEROAD®