N2 | W2 | A | -

MegaRail ec 2.2



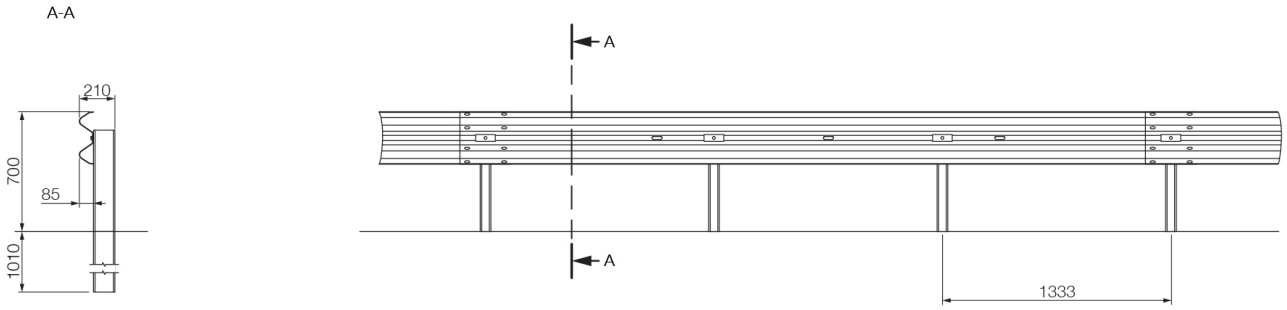

TECHNICAL SPECIFICATIONS

Working width (m) 0.80	Dyn. deflection (m) 0.70	Vehicle intrusion (m) -
Construction width (m) 0.21	Construction height (m) 0.70	Post distance (m) 1.33
Application area driven in ground	Type Single	Test length (m) 56.00

© Saferoad RRS GmbH

CE

SAFEROAD®

N2 | W2 | A | -

MegaRail ec 2.2



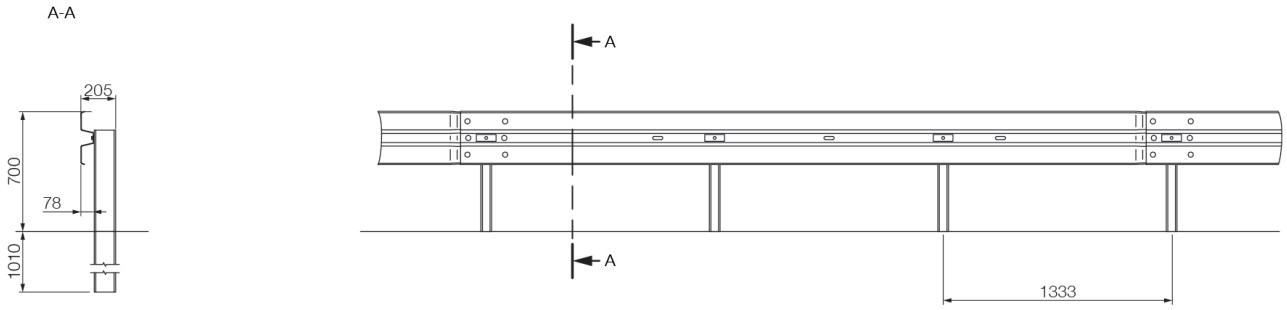

TECHNICAL SPECIFICATIONS

Working width (m) 0.80	Dyn. deflection (m) 0.70	Vehicle intrusion (m) -
Construction width (m) 0.21	Construction height (m) 0.70	Post distance (m) 1.33
Application area driven in ground	Type Single	Test length (m) 56.00

© Saferoad RRS GmbH

CE

SAFEROAD®