H1 | W2 | A | VI3

MegaRail bs



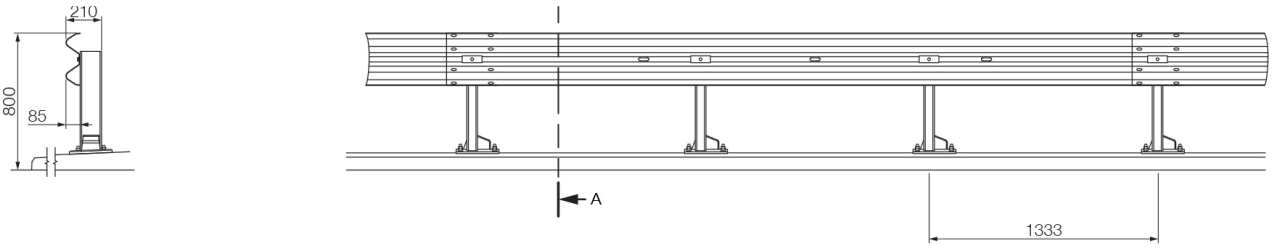

TECHNICAL SPECIFICATIONS

Working width (m) 0.80	Dyn. deflection (m) 0.60	Vehicle intrusion (m) 1.00
Construction width (m) 0.21	Construction height (m) 0.70	Post distance (m) 1.33
Application area anchored	Type Single	Test length (m) 52.00

© Saferoad RRS GmbH

CE

SAFEROAD®

H1 | W2 | A | VI3

MegaRail bs



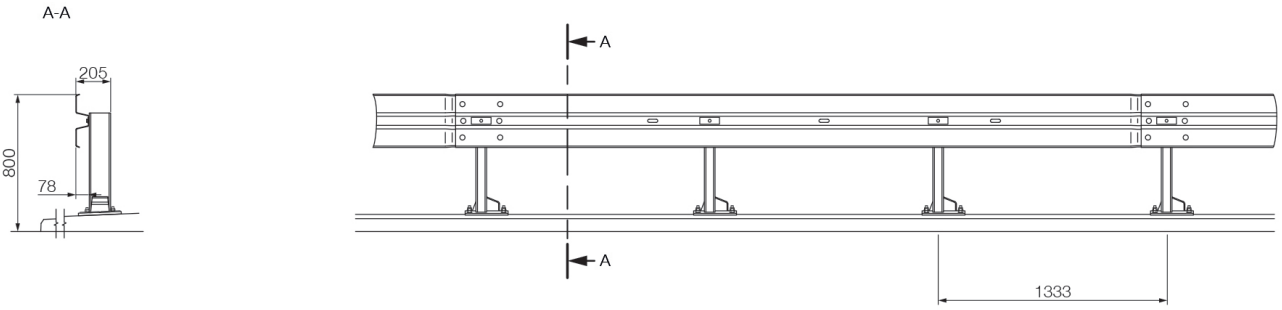

TECHNICAL SPECIFICATIONS

Working width (m) 0.80	Dyn. deflection (m) 0.60	Vehicle intrusion (m) 1.00
Construction width (m) 0.21	Construction height (m) 0.70	Post distance (m) 1.33
Application area anchored	Type Single	Test length (m) 52.00

© Saferoad RRS GmbH

CE

SAFEROAD®