MONTAGETAFEL · ASSEMBLY DRAWING

SafeStar 221

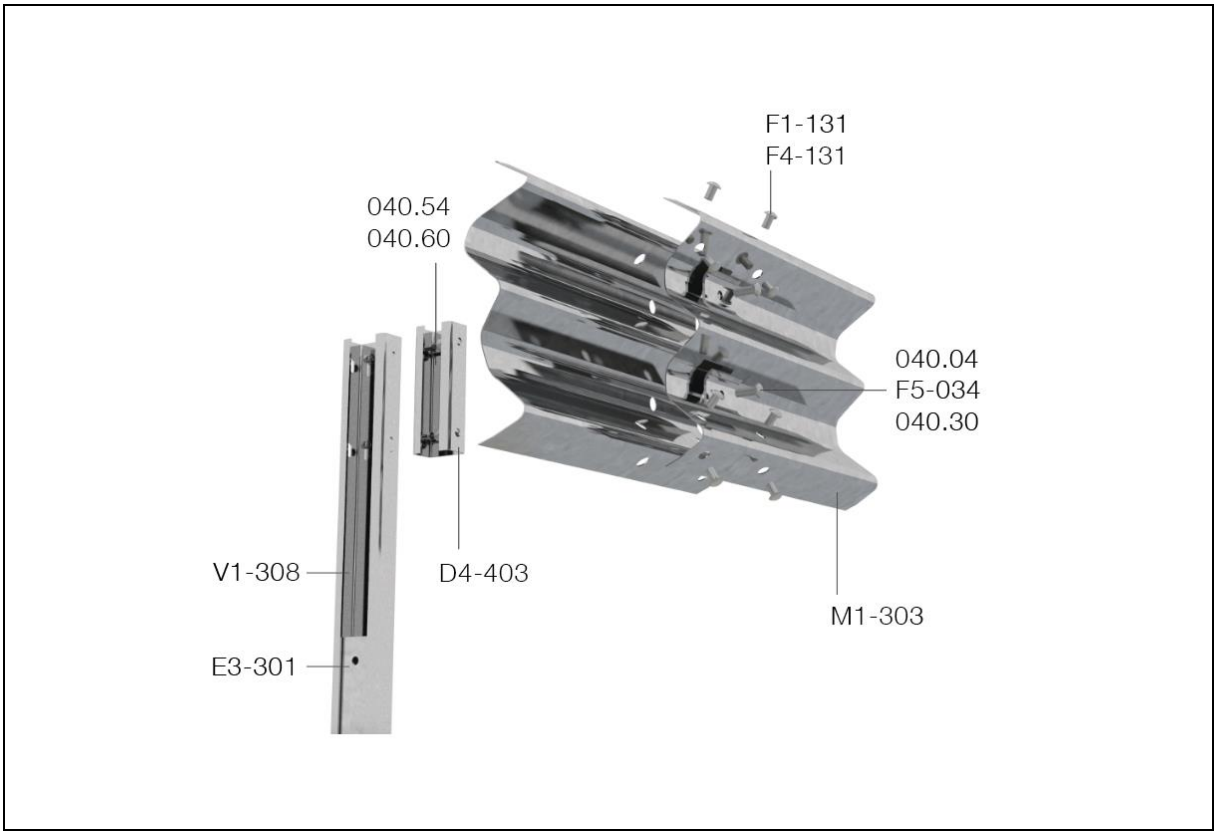

Bauteile · Main components

Nr. · no.	Beschreibung	Description	Qty/4.5 m
E3-301	Versteifungselement, U110x47, 300 mm, 5.0	Stiffener, U110x47, 300 mm, 5.0	3,00
D4-403	Abstandhalter, C100x60, 275 mm, 5.0	Distance element, C100x60, 275 mm, 5.0	3,00
M1-303	SP-Holm, 3W, 4820 mm, 2.5	Beam, 3W, 4820 mm, 2.5	1,00
V1-308	Pfosten, C125x62.5, 1650 mm, 5.0	Post, C125x62.5, 1650 mm, 5.0	3,00

Befestigungsmaterial · Fasteners

Nr. · no.	Beschreibung	Description	Qty/m
F5-034	Decklasche, f. M16, 110x80x5.0, curved	Plate, f. M16, 110x80x5.0, curved	6,00
040.04	HRK-Schraube m. 6-kt., M16x45, 8.8	Panhead bolt w. hex., M16x45, 8.8	6,00
F1-131	HRK-Schraube, M16x30, 8.8	Panhead bolt, M16x30, 8.8	8,00
040.30	Scheibe, f. M16, Ø18x30x3.0	Washer, f. M16, Ø18x30x3.0	6,00
F4-131	Scheibe, f. M16, Ø18x38x3.0	Washer, f. M16, Ø18x38x3.0	8,00
040.54	6-kt.-Schraube, M10x45, 8.8	Hexagonal bolt, M10x45, 8.8	6,00
040.60	Scheibe, f. M10, Ø11x20x2.0	Washer, f. M10, Ø11x20x2.0	6,00

© 01/2022 Saferoad RRS GmbH · Changes and errors excepted